PAPER FOLDER

DF-915

INSTRUCTION MANUAL

[120 V]

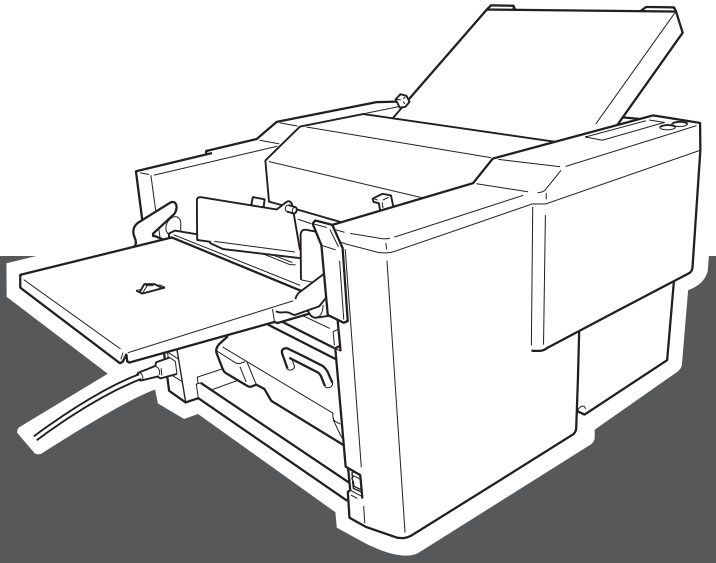

Duplo

This equipment has been tested and found to comply with the limits for a Class B digital device, pursuant to Part 15 of the FCC Rules. These limits are designed to provide reasonable protection against harmful interference in a residential installation. This equipment generates, uses and can radiate radio frequency energy and, if not installed and used in accordance with the instructions, may cause harmful interference to radio communications. However, there is no guarantee that interference will not occur in a particular installation. If this equipment does cause harmful interference to radio or television reception, which can be determined by turning the equipment off and on, the user is encouraged to try to correct the interference by one or more of the following measures:

- Reorient or relocate the receiving antenna.
- Increase the separation between the equipment and receiver.
- Connect the equipment into an outlet on a circuit different from that to which the receiver is connected.
- Consult the dealer or an experienced radio/TV technician for help.

INTRODUCTION

Thank you for purchasing this Duplo equipment.
To ensure correct usage, please read this instruction manual thoroughly, especially the section Safety Precautions.

The aim of this instruction manual is safe and proper use. For this reason, users of this equipment for purposes or by methods other than those described in this manual and users who remodel this equipment for their own reasons are asked to ensure safety in use at their own responsibility.

After reading, please keep this instruction manual handy for future reference.

ABOUT THIS INSTRUCTION MANUAL

This instruction manual describes the functions of the equipment. It is composed of the following chapters.
It can be read from the required pages in use of this equipment.

♦ Safety (p.3 to 6)

This chapter describes user safety, such as precautions in use of this equipment, etc.

♦ Outline (p.7 to 18)

This chapter describes what users need to know about this equipment before using it.

♦ Basic Operations (p.19 to 27)

This chapter describes the most basic paper folding operation.

♦ Correcting Folding Misalignment (p.28 to 34)

This chapter describes how to correct folding misalignment of folded paper.

♦ Applied Use (p.35 to 47)

This chapter outlines applied paper folding operations such as standard folding of non-standard paper, custom folding, and cross folding, etc.

♦ Others (p.48 to 59)

This chapter describes error messages, troubleshooting guide, etc.

TABLE OF CONTENTS

♦ Safety

1. Safety Precautions 3
Caution Label Location 5

2. Installation Precautions 5
2-1. Installation Location 5
2-2. Precautions in Moving the Unit 5

3. Usage Precautions 6
3-1. Power Supply 6
3-2. Operating Environment 6
3-3. Storage Conditions 6
3-4. Maintenance 6

♦ Outline

4. Installation 7
4-1. Standard Accessories 7
4-2. Installation Procedure 8

5. Names and Operation of Parts 11
5-1. External Parts 11
5-2. Internal Parts 12

6. Control Panel 14
6-1. Names and Operation of Control Panel 14
6-2. Description of Windows 16
6-3. Types of Buzzer Sounds 18

♦ Basic Operations

7. Precautions Prior to Use 19
7-1. Paper Used 19
7-2. Precautions on Stacking Paper 20
7-3. Automatic Detection of Paper Size 20
7-4. Checking the Front/Back, Top/End of Paper 21
7-5. Using the “QUICK START” 21

8. Paper Folding Methods 22

9. Standard Folding of Standard Paper 23
9-1. Standard Paper 23
9-2. Standard Folding Modes 23
9-3. Operation Procedure 23

♦ Correcting Folding Misalignment

10. Folding Misalignment 28
10-1. Correcting Folding Misalignment Along Sides of Paper 28
10-2. Correcting Folding Misalignment Along Vertical Length of Paper 29
10-3. Correcting Deformed Folding 34

♦ Applied Use

11. Standard Folding of Non-standard Paper 35
11-1. Paper Size Restrictions 35
11-2. Operation Procedure 35

12. Custom Folding 38
12-1. Paper Size Restrictions 38
12-2. Operation Procedure 38

13. Cross Folding 41
13-1. Cross Folding Methods 41
13-2. Precautions on Cross Folding 41
13-3. Cross Folding of Standard Paper 42
13-4. Cross Folding of Non-standard Paper 43
13-5. Cross Folding Paper at the Desired Folding Position 43

14. Using Art Paper and Coated Paper 44
14-1. Characteristics of Art Paper and Coated Paper 44
14-2. Operation Procedure 44

15. Using Special Paper 45
15-1. Double Folding Thick Paper 45
15-2. Using Recycled Paper 45
15-3. Folding Small Size Paper 46

16. Stacker Roller 47
16-1. Changing the Stacker Roller Position 47
16-2. Changing the Stacker Roller Height 47

♦ Others

17. When Paper Jamming Occurs 48
17-1. When Paper Jams at Paper Feed Section ... 48
17-2. When Paper Jams Near Paper Feed Ring ... 48
17-3. When Paper Jams Inside Folding Plate 49
17-4. When Paper Winds Around Folding Roller ... 49
17-5. When Paper Jams Near Folding Plate 1 ... 50
17-6. When Paper Jams Near Folding Plate 2 ... 51
17-7. When Paper Jams at Paper Ejection Section 52

18. Error Messages 53

19. Troubleshooting 54

20. Cleaning the Unit 56
20-1. Cleaning the Folding Rollers 56
20-2. Cleaning the Paper Feed Rings 57
20-3. Cleaning the Paper Separator 57
20-4. Cleaning the Paper Feed Inlet Sensor 57
20-5. Cleaning the Paper Ejection Outlet Sensor ... 58

21. Specifications 59

1. SAFETY PRECAUTIONS

Always observe the cautions and warnings given below to prevent personal injury or property damage.

■ The degree of danger and damage that could occur is indicated on two levels by the following marks.

⚠	***WARNING***	***: Ignoring this mark could result in the possibility of serious injury or even death.***
⚠	***CAUTION***	***: Ignoring this mark could result in the possibility of injury or physical damage.***

■ The following graphic symbols indicate the various types of action to be performed or avoided.

⃠ This graphic symbol indicates a forbidden action.

means "Do not disassemble."

means "Do not touch."

● This graphic symbol indicates actions that must be performed.

means "Disconnect the power plug."

⚠ *WARNING:*

Do not place metal objects or vessels containing liquids on top of the unit. The entry of any metal object or liquid could result in a fire or an electrical shock.

Do not insert any metal or easily-combustible object inside this unit. This could result in a fire or an electrical shock.

Do not touch or insert foreign objects into any rotating part during operation. This could result in injury.

Do not remove the cover or back panel. This unit contains high-voltage components that could cause an electrical shock.

Do not disassemble, modify or repair this unit. There is a danger of fire, electrical shock or injury. Contact your dealer when repairs are necessary.

Use only the power supply voltage specified on the main nameplate. Using other voltages could result in a fire or an electrical shock.

Keep this unit and the power cord away from heaters and heater vents. Excessive heat could melt the cover or power cord covering, and result in a fire or an electrical shock.

Do not use solvent inside or near the unit (e.g. when cleaning the unit). Such solvents may damage the rubber rollers and resin inside the unit, resulting in malfunctions.

(Continued on the next page)

SAFETY PRECAUTIONS (continued)

Make sure that the combined power consumption of the appliances to be connected does not exceed the capacity rating of the power outlets or plug receptacles. Exceeding the capacity rating could cause the power outlets, plug receptacles, or power extension cords to overheat and catch a fire.

Remove any dust that accumulates on the power plug prongs and the surface of the plug from which the prongs extend. Accumulated dust could result in a fire.

If any foreign object such as metal or liquid should enter this unit, immediately turn the unit off at the power switch and disconnect the power plug from the power outlet. Failure to do so could result in a fire or an electrical shock. Contact your dealer immediately.

Do not damage the power cord or power plug. (Do not scratch, alter, bend, twist, pull or place heavy objects on the power cord or power plug.)
This could result in damage, a fire or an electrical shock.

Always grip the plug when disconnecting the power plug from the power outlet. Forcibly pulling on the power cord could cause damage, resulting in a fire or an electrical shock.

Do not handle the power plug with wet hands. This could result in an electrical shock.

Before cleaning this unit, turn the unit off at the power switch and disconnect the power plug from the power outlet. Accidental operation of the unit during cleaning could result in injury.

Do not touch the power switch with wet hands. Otherwise electric hazards may occur.

Do not use flammable sprays inside or near the unit (e.g. when cleaning the unit). Such flammable gas may ignite and cause a fire or combustion.

⚠ *CAUTION:*

Keep away long hair, ties, jewelry and loose clothing. This could result in injury.

Do not put fingers inside during operation. This could result in injury.

Always disconnect the power plug from the power outlet when the unit is not to be used for an extended period. Failure to do so could result in a fire due to leakage current if the insulation should deteriorate.

Install this unit on a level, stable stand or floor, with sufficient space around it. Failure to do so could result in the unit overturning and causing injury.

Do not install this unit in a location where there is excessive humidity or where contact with water is possible. Poor choice of location could result in deterioration of the insulation, a fire or an electrical shock.

Disconnect the power plug from the power outlet before attempting to move this unit. Failure to do so could result in power cord damage, a fire or an electrical shock.

Caution Label Location

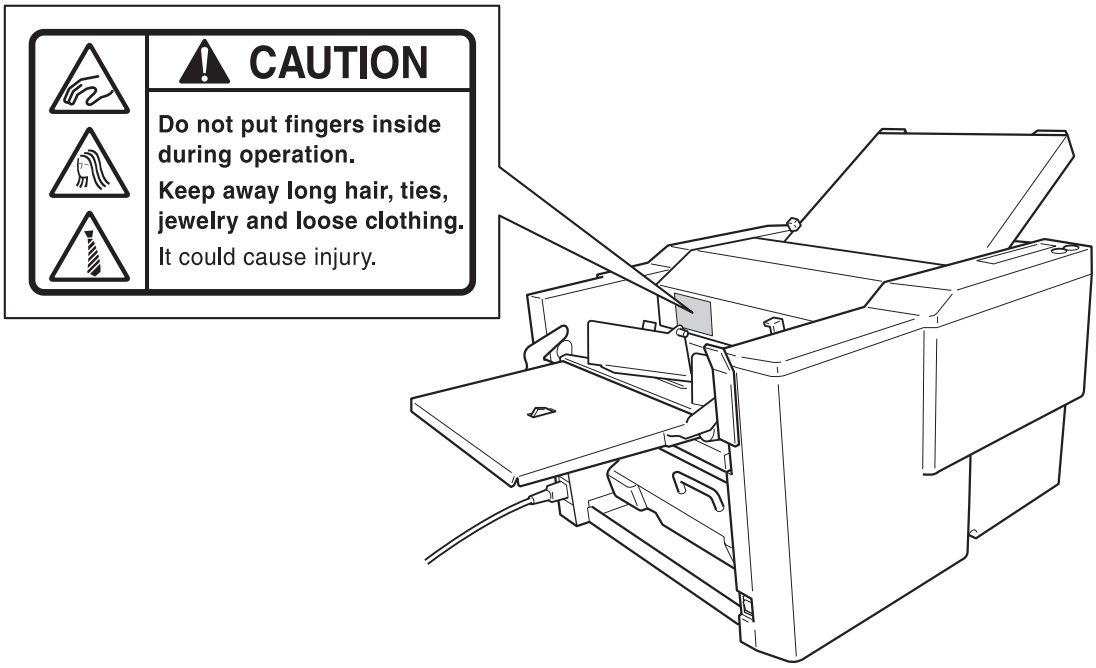

Note **The caution label is pasted on the unit to ensure the safety of users. Do not remove nor change it. If the label becomes dirty, damaged, or lost, be sure to contact your nearest dealer for a new one.**

2. INSTALLATION PRECAUTIONS

2-1. Installation Location

◆ Install the unit on a table which can tolerate its weight. The mass of the unit is as follows.
- 94 lb

◆ Install the unit close to a power outlet.

◆ The unit may make loud sounds while operating according to the processing speed and paper used due to its paper-folding mechanism. Therefore install it where it will not disturb the office environment.

◆ Refer to **"1. SAFETY PRECAUTIONS" (☞ p.3, 4)**.

2-2. Precautions in Moving the Unit

◆ As the unit weights 94 lb, when moving it, it should be held at the base by two persons.

◆ When moving the unit with folding plates 1 and 2 removed, make sure the folding plates are not subject to shock. Otherwise, the folding plates may damage, resulting in poor folding accuracy.

◆ Arrange the power cord carefully so that it does not get stepped on, and damage as a result.

3. USAGE PRECAUTIONS

3-1. Power Supply

◆ This equipment shall be installed near the socket-outlet where the plug on the power supply cord is easily accessible.

◆ Make sure the power supply used is always within the following range.
- 100 to 240 V AC, 50/60 Hz

◆ When you power other appliances from the same AC outlet, make sure that the combined power consumption does not exceed the power supply capacity.
- Rated power of this equipment: 1.4 to 0.7 A (95 W)

3-2. Operating Environment

Operate this unit in the following environment:

– where the temperature range is between 41 and 95°F,
– where the humidity range is between 20 and 80% RH (no dew condensation),
– which is not subject to direct sunlight,
– which is subject to little or no vibration,
– where there are no harmful chemicals,
– which is reasonably free from dust,
– which is free from air-borne salt, and
– where the equipment is not exposed to water.

3-3. Storage Conditions

Store this unit in the following environment:

– where the temperature range is between 14 and 122°F,
– where the humidity range is between 10 and 85% RH (no dew condensation),
– which is not subject to direct sunlight,
– which is subject to little or no vibration,
– where there are no harmful chemicals,
– which is reasonably free from dust,
– which is free from air-borne salt, and
– where the equipment is not exposed to water.

3-4. Maintenance

To protect the special features of this unit, the customer should never apply oil or grease to the parts. Please contact your dealer in case of any problem.

⚠ WARNING

Do not use flammable sprays or solvent inside or near the unit (e.g. when cleaning the unit). Such flammable gas may ignite and cause a fire or combustion. Such solvents may damage the rubber rollers and resin inside the unit, resulting in malfunctions.

4. INSTALLATION

4-1. Standard Accessories

Confirm that the following parts are provided.

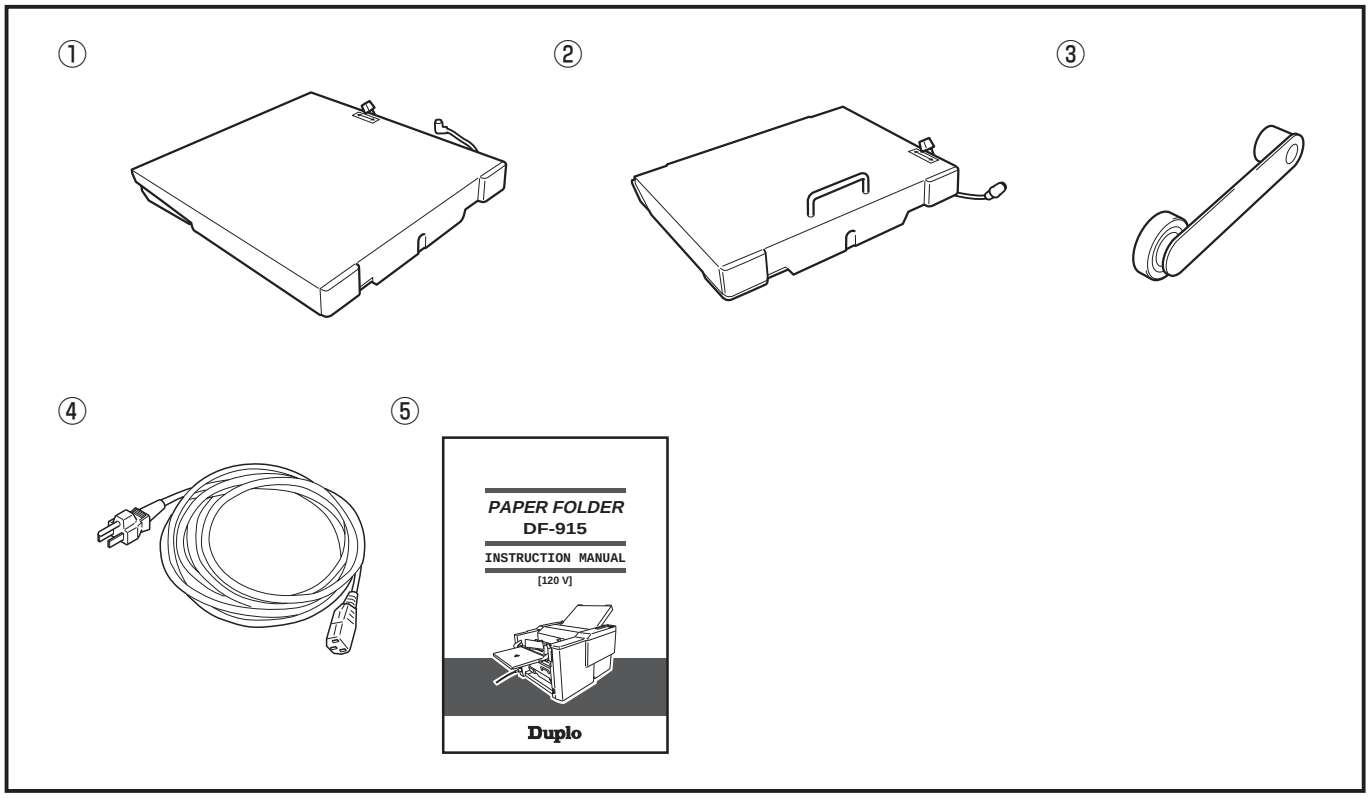

No.	Name	Qty.	Remarks
①	Folding plate 1	1	
②	Folding plate 2	1	
③	Cross folding guide	1	Auxiliary part for cross folding
④	Power cord	1	
⑤	Instruction manual	1	This manual

4-2. Installation Procedure

1 Open the auxiliary paper feed tray.

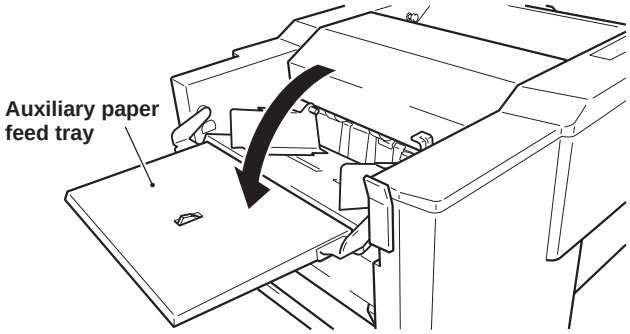

2 Open the top cover, and place the cross folding guide as shown in the figure. After setting, close the top cover properly.

Note **If the top cover is open, the unit will not operate.**

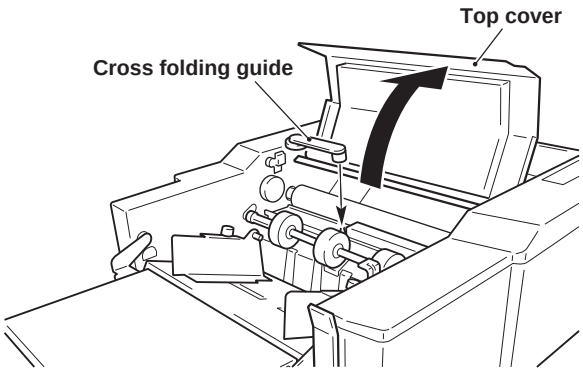

3 Open the paper receiving tray.

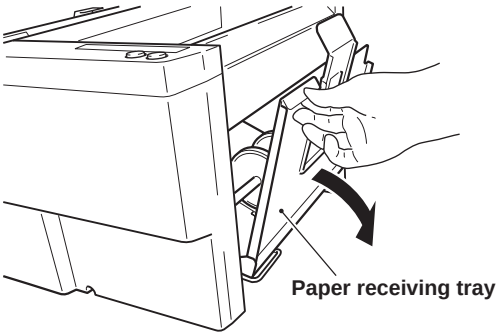

4 Extend the paper receiving stopper.

- Adjust the stopper according to the paper size and folded shape.

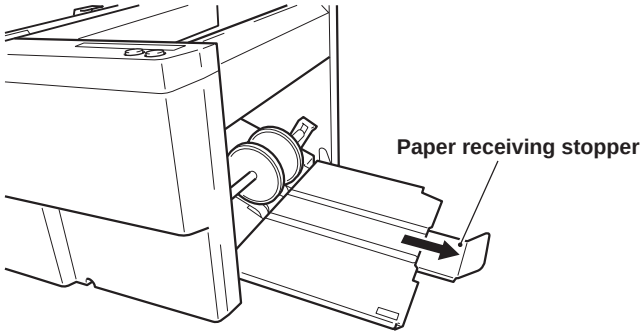

5 Attach folding plate 1.

① Push the lock lever on folding plate 1 towards “UNLOCK”.

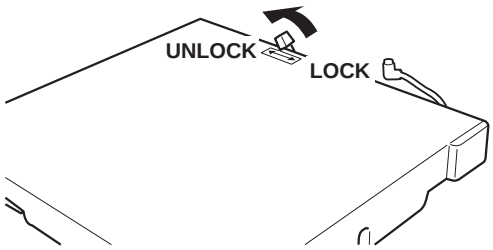

② Insert folding plate 1 into the unit.

Note **When inserting the folding plate, be sure to hold it with both hands.**

③ Push the lock lever towards “LOCK”, and secure folding plate 1.

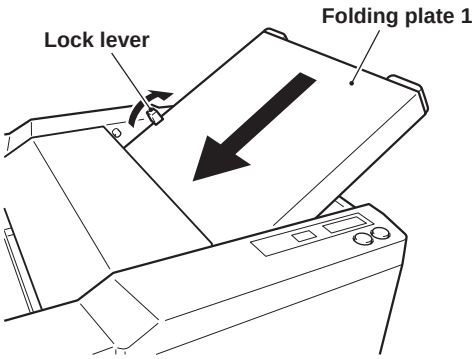

④ Open the top cover, rotate the jam correction knob to check that folding plate 1 is properly secured. If the knob rotates smoothly, it means that folding plate 1 is secured.

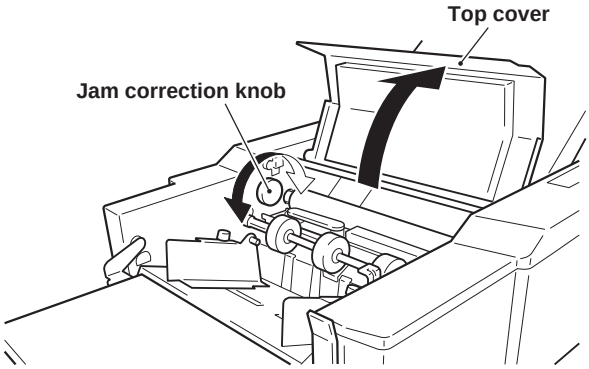

⑤ Connect control cord 1 of folding plate 1 to the No.1 connector.

Note **Be sure to turn off the power before connecting or disconnecting the control cord. Otherwise the unit will malfunction.**

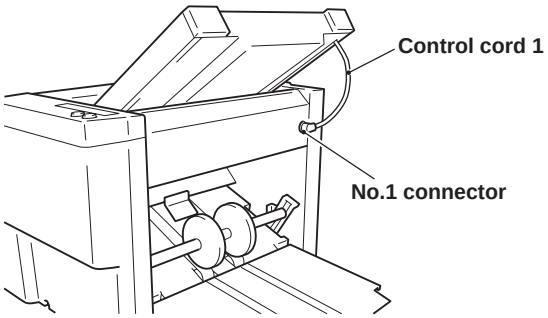

6 Attach folding plate 2.

① Push the lock lever on folding plate 2 towards "UNLOCK".

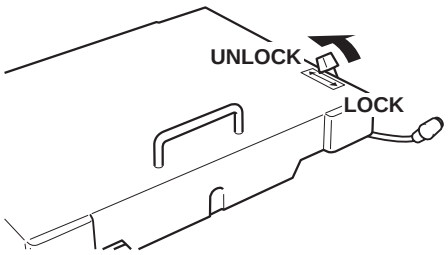

② Push in folding plate 2 along the set guide to the "2 ( )" mark. The safety stopper locks at this position.

Note **Be sure to insert the folding plate holding the handle with both hands.**

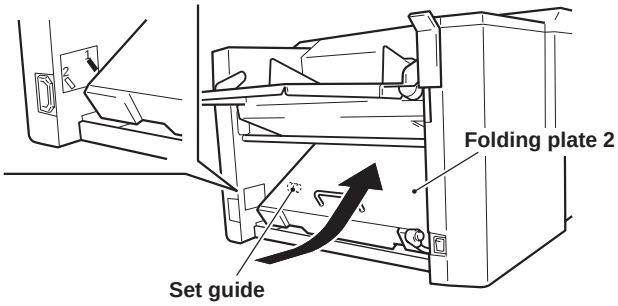

③ While slightly lifting folding plate 2 with the handle, push in it to the "1 ( )" mark.

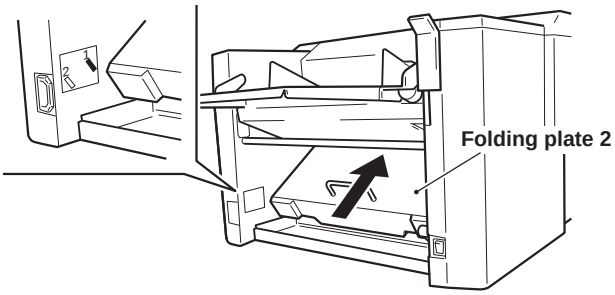

④ Push the lock lever towards "LOCK", and secure folding plate 2.

⑤ Move folding plate 2 up and down with the handle to check that it is secured.

⑥ Open the top cover, rotate the jam correction knob to check that folding plate 2 is properly secured again. If the knob rotates smoothly, it means that folding plate 2 is secured.

⑦ Connect control cord 2 of folding plate 2 to the No.2 connector.

Note **Be sure to turn off the power before connecting or disconnecting the control cord. Otherwise the unit will malfunction.**

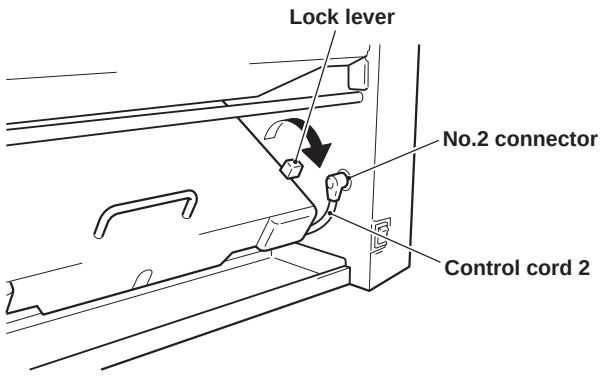

7 Connect the power cord to the unit.

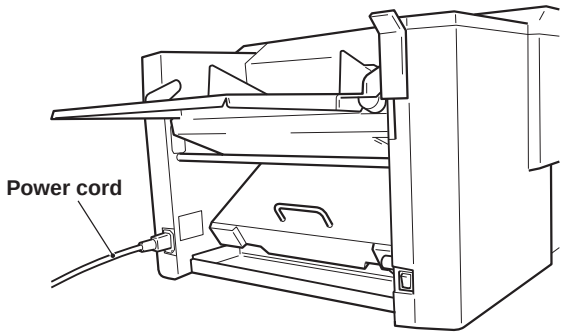

8 Insert the power plug into the outlet.

5. NAMES AND OPERATION OF PARTS

5-1. External Parts

<Paper feed side>

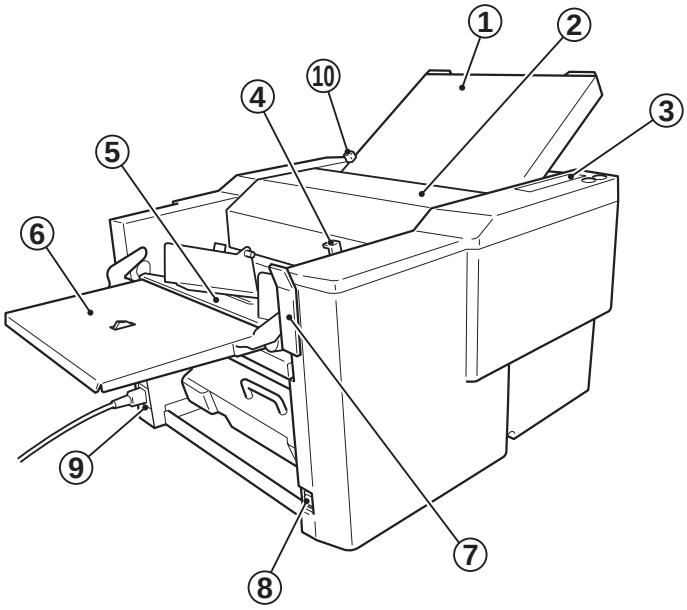

<Paper ejection side>

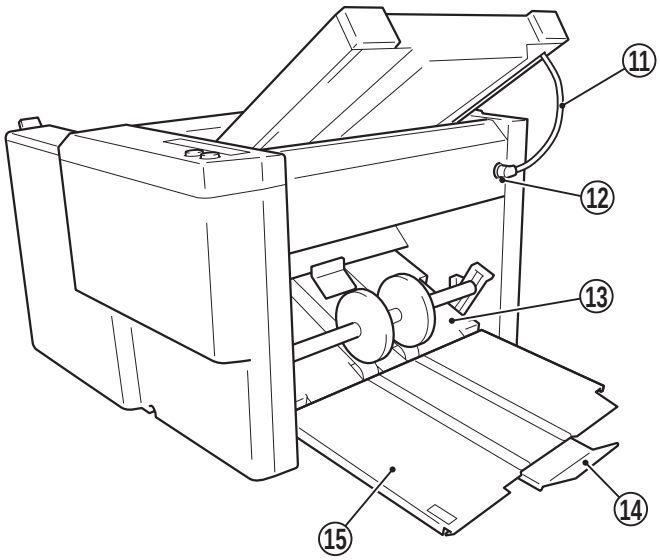

No.	Name	Operation
①	Folding plate 1	Guide plate for deciding the paper folding position
②	Top cover	Safety cover to prevent the user from touching the moving parts
③	Control panel	For operating the unit
④	Paper feed pressure adjusting lever	For adjusting the paper feed pressure
⑤	Paper feed tray	For stacking the paper to be folded
⑥	Auxiliary paper feed tray	For ensuring paper are stacked on the paper feed tray properly
⑦	Paper set lever	For raising and lowering the paper feed tray when stacking paper
⑧	Power switch	For turning on/off the power
⑨	Power inlet	For connecting external power
⑩	Folding plate 1 lock lever	For securing folding plate 1
⑪	Control cord 1	For controlling folding plate 1
⑫	No.1 connector	For inserting control cord 1
⑬	Paper ejection section	Section which ejects folded paper from the unit
⑭	Paper receiving stopper	For aligning ejected paper
⑮	Paper receiving tray	For receiving folded paper ejected out

5-2. Internal Parts

<Folding plate 2 side>

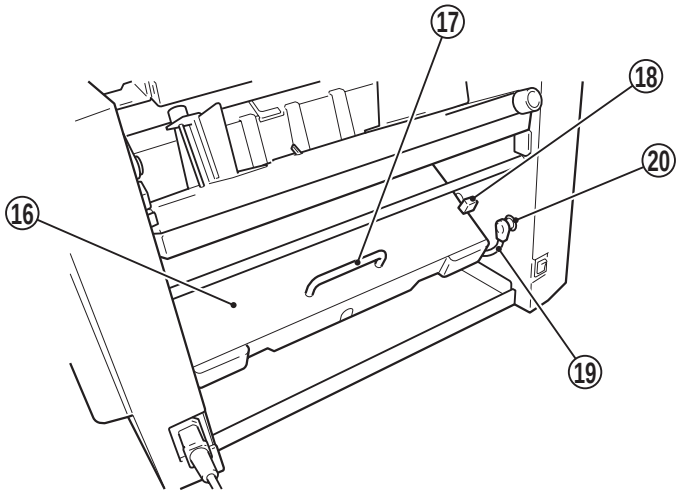

<Inside paper ejection section>

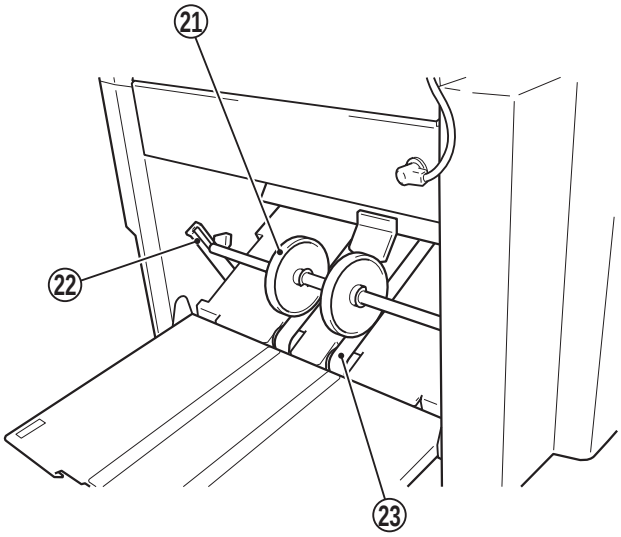

No.	Name	Operation
⑯	Folding plate 2	Guide plate for deciding the paper folding position
⑰	Folding plate 2 handle	For attaching/removing folding plate 2
⑱	Folding plate 2 lock lever	For securing folding plate 2
⑲	Control cord 2	For controlling folding plate 2
⑳	No.2 connector	For inserting control cord 2
㉑	Stacker roller	Functions together with the stacker belt to eject folded paper from the unit.
㉒	Stacker support	For supporting the stacker roller. The height of the roller can be adjusted.
㉓	Stacker belt	For ejecting folded paper from the unit

<Inside top cover>

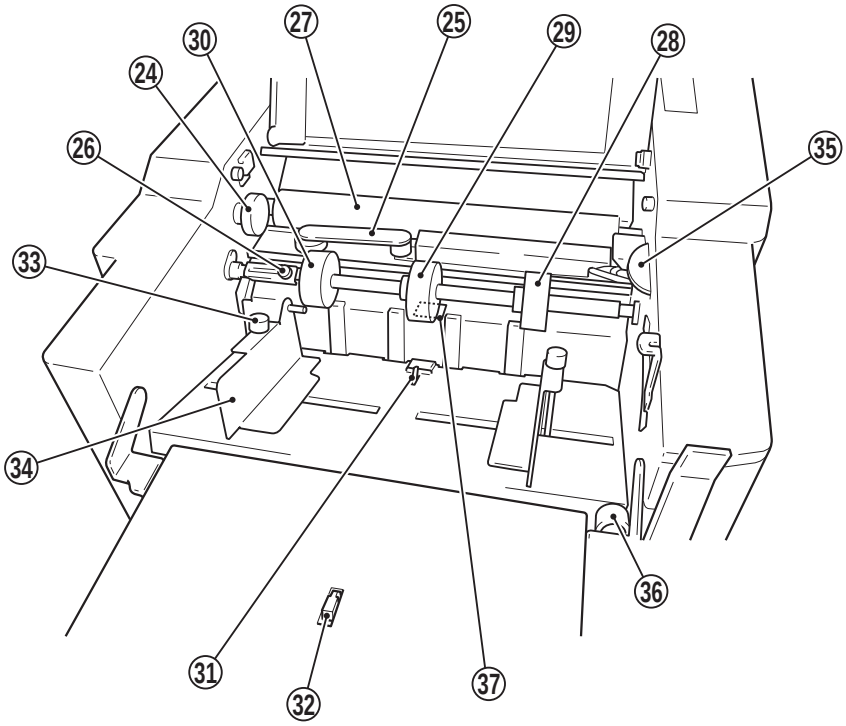

No.	Name	Operation
㉔	Jam correction knob	For rotating the folding rollers when paper has jammed inside the unit or when cleaning the unit
㉕	Cross folding guide	For holding down the folded paper when cross folding
㉖	Set knob	Screw for securing the auxiliary paper feed ring (movable)
㉗	Folding roller	For folding paper
㉘	Auxiliary paper feed ring	For holding down curled paper for reliable paper feed
㉙	Paper feed ring	For feeding paper
㉚	Auxiliary paper feed ring (movable)	Movable according to the paper size in cross folding
㉛	Paper switch 1	For detecting the presence of paper
㉜	Paper switch 2	For detecting the presence of legal size paper
㉝	Guide fixing screw	For securing the paper feed guide
㉞	Paper feed guide	For holding paper stacked on the paper feed tray firmly
㉟	Separating pressure adjusting dial	For adjusting the paper separating pressure
㊱	Skew correction knob	For correcting skewed paper feed
㊲	Paper separator	For separating paper

6. CONTROL PANEL

6-1. Names and Operation of Control Panel

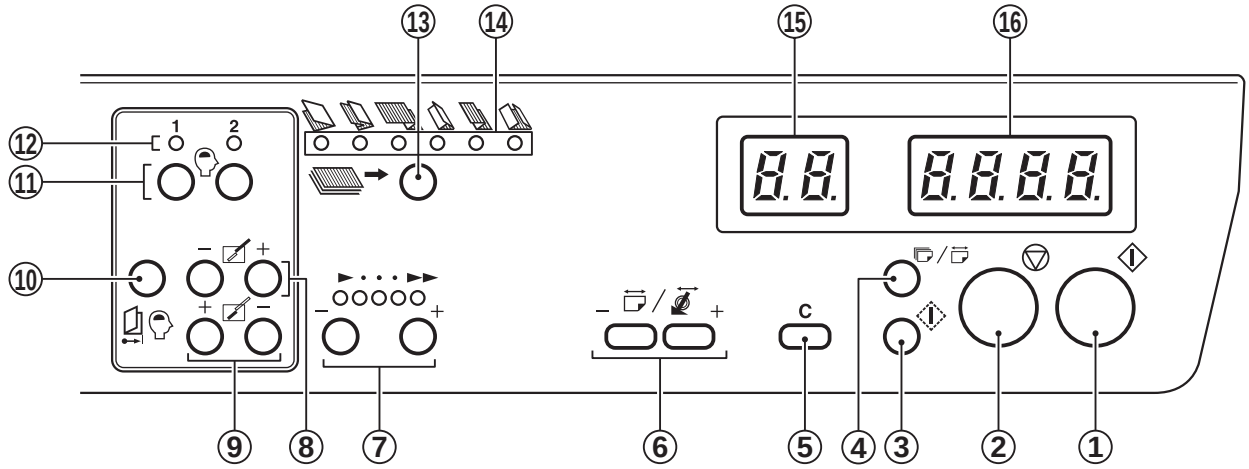

No.	Name	Operation
①	Start key	Press to start paper folding.
②	Stop key	Press to stop paper folding.
③	Test key	Press to test fold two sheets of paper.
④	No. of sheets/Paper length key	Press to switch between the mode for entering the number of sheets to be processed and that for entering the paper length. When entering the paper length, use this key to register the value entered with the ⑥ **Paper length/Stacker roller position key**.
⑤	Clear key	Press to clear the counter to 0.
⑥	Paper length/Stacker roller position key	Press to enter the number of sheets to be processed or paper length. When setting the position of the stacker roller, press this key while pressing the ② **Stop key**.
⑦	Speed key	Press to select the processing speed from five levels. The processing speed needs to be changed according to the size and thickness of the paper used. Pressing the "+" key increases the speed. Pressing the "–" key decreases the speed.
⑧	Folding plate 1 folding stopper adjusting key	Press to adjust the position (folding position) of the folding stopper of folding plate 1. Every time the "+" key on the right is pressed, the folding stopper moves in direction Ⓐ shown in the figure on the next page. Every time the "–" key on the left is pressed, the folding stopper moves in direction Ⓑ shown in the figure on the next page. The folding stopper moves by 0.005" every time the key is pressed. Pressing this key continuously moves the folding stopper continuously within the range set. If the paper is more than ±0.2" of standard paper size, take it to be non-standard size paper instead of adjusting the folding position with this key. See **"◆ Correction range" (☞ p.30)**
⑨	Folding plate 2 folding stopper adjusting key	Press to adjust the position (folding position) of the folding stopper of folding plate 2. Every time the "+" key on the left is pressed, the folding stopper moves in direction Ⓐ shown in the figure on the next page. Every time the "–" key on the right is pressed, the folding stopper moves in direction Ⓑ shown in the figure on the next page. The other functions are the same as the ⑧ **Folding plate 1 folding stopper adjusting key**.

No.	Name	Operation
⑩	Adjustment registration key	If the position of the folding stopper has been finely adjusted in standard folding operations, the adjustment value can be registered with this key. A total of 30 different adjustment values can be registered (6 standard folding modes × 5 standard paper sizes). The registered data is preserved even after the power is turned off. To erase the registered data, select the paper size and folding mode to be erased. Next press this key until the buzzer sounds “pi.pi...” for about two seconds, and then press it continuously for another two seconds until the buzzer sounds “pi...”. (Four seconds in total)
⑪	Custom folding registration key	Press to register the position of the folding stopper and stacker roller which have been moved when using custom folding modes. Up to two individual paper folding modes can be registered for custom folding. The registered data is preserved even after the power is turned off. To erase the registered data, continue pressing the custom folding registration key “1” or “2” registering the data to be erased until the buzzer sounds “pi...”.
⑫	Custom folding registration lamp	When this lamp is lit, it means that the custom folding mode is registered. The custom folding mode cannot be selected if it has not been registered with the ⑪ **Custom folding registration key**.
⑬	Folding mode key	Press to select the folding mode from six standard folding modes. When the power is turned on, the lamp of the single-folding mode lights up. Each time this key is pressed, the folding mode lamp lights up in order towards the right. If a custom folding mode is registered with the ⑪ **Custom folding registration key**, the custom folding mode can be selected.
⑭	Standard folding lamp	Displays the folding mode selected from six standard folding modes. When a folding mode registered with the folding stopper position adjustment value is selected, the corresponding lamp blinks.
⑮	Left window	Displays the size of standard paper stacked on the paper feed tray (LGR to INV), etc. See **“6-2. Description of Windows” (☞ p.16)**
⑯	Right window (Counter)	Displays the paper length entered, correction value for the folding stopper position, error messages, and the number of sheets already processed (add counter) or yet to be processed (subtract counter). See **“6-2. Description of Windows” (☞ p.16)**

<Outline of paper folder>

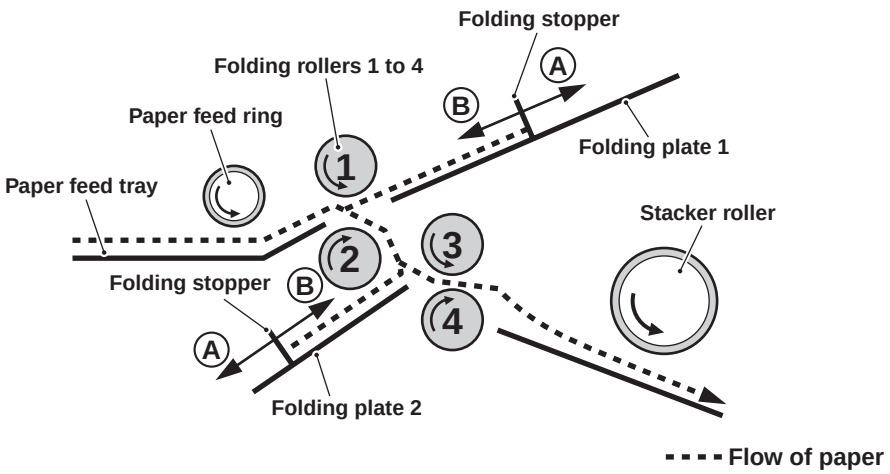

6-2. Description of Windows

This unit has two windows; the 2-digit left window and 4-digit right window.
Their functions are described below.

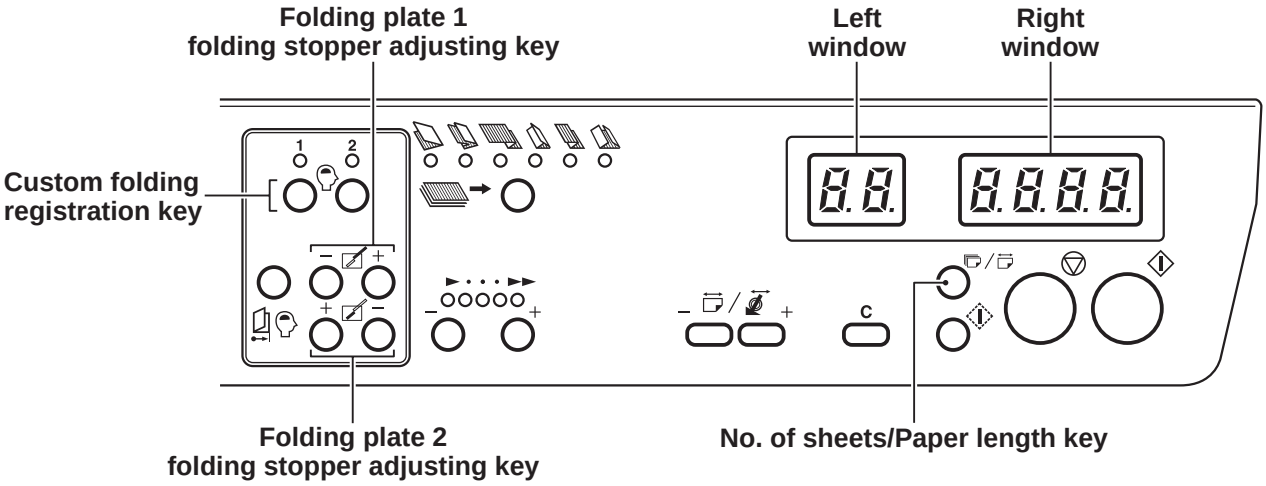

(1) 2-digit left window

Five standard paper sizes which can be used in standard folding.
These are displayed when the paper feed guides are set to the paper size used on the paper feed tray scale.

Indicates that the standard folding mode of non-standard paper (folding by entering paper length) is set.
This is displayed when the length of non-standard paper is registered using the No. of sheets/Paper length key.

Indicates that the custom folding mode is set.
This is displayed when the custom folding registration key is pressed.

Indicates that folding plate 1 is selected in the adjustment and setting of the folding stopper position (folding position).
This is displayed when the folding plate 1 folding stopper adjusting key is pressed.

Indicates that folding plate 2 is selected in the adjustment and setting of the folding stopper position (folding position).
This is displayed when the folding plate 2 folding stopper adjusting key is pressed.

This is displayed when paper has run out on the paper feed tray.

(2) 4-digit right window

1260

Display example of the add counter. Displayed value indicates the number of sheets already processed. Maximum count displayed is “9999”.

920.

Display example of the subtract counter. Displayed value indicates the number of sheets yet to be processed. Maximum count displayed is “999.”.

L. 12.0

Paper length entered in the standard folding of non-standard paper (unit: inch).

.030

-.040

Corrected value of the folding stopper position (folding position) in standard folding (unit: inch).
When “.030” is displayed, it means that the folding stopper of folding plate 1 or 2 is set 0.03" from the automatically set position in direction Ⓐ **shown in the figure on page 15**.
When “–.040” is displayed, it means that the folding stopper of folding plate 1 or 2 is set 0.04" from the automatically set position in direction Ⓑ **shown in the figure on page 15**.

8.97

Value set for the folding stopper position (folding position) in custom folding (unit: inch).
When “8.97” is displayed, it means that the length of the folded plane (see figure below) by folding plate 1 or 2 will be about 8.97".

Note **The value displayed is an approximate, and the actual folded size may differ according to the thickness and characteristics of the paper used.**

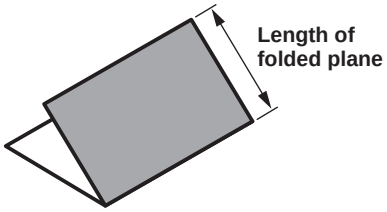

roL.3

Position of the stacker roller set. Can be set within the range of roL. 1 to 6.

Note **The right window also shows error messages for paper jamming, etc. For details, refer to “18. ERROR MESSAGES” (☞ p.53).**

6-3. Types of Buzzer Sounds

This unit sounds the verification buzzer when keys on the control panel are pressed or when paper has run out on the paper feed tray. The different types of buzzer are as follows.

- **“Pi”**
  Normal operating sound when keys on the control panel are pressed.
- **“Pi.Pi.Pi”**
  Warning buzzer to indicate operation error or that paper has run out.
- **“Pi...Pi...”**
  Indicates that the stop key has been pressed or the entered number of sheets to be processed has been reached.
- **“Pi.Pi...”**
  Indicates that a registration procedure (paper length registration, standard folding correction registration, custom folding registration, etc.) has been completed.
- **“Pi...Pi...Pi...”**
  Indicates that problems such as paper jamming have occurred.
- **“Pi...”**
  Indicates that a registered value has been cleared.

7. PRECAUTIONS PRIOR TO USE

The following explains precautions to be understood prior to using this unit.

7-1. Paper Used

- **If using folded or curled paper, flatten first prior to use.**

Note **Always pile up paper when storing. Also do not store paper in humid places.**

- **Make sure that the printing ink on the paper has dried completely prior to use.**

  Otherwise, the ink will dirty the paper feed ring and folding roller, and this will not only lead to reduced folding performance, but the ink will also adhere to and dirty the folded paper.

- **Use paper that has been cut at right angles.**

  Otherwise, problems such as folding misalignment will result.

- **Fan paper just copied or printed well prior to use.**

  Paper just copied or printed contains considerable static electricity, and if not fanned well, problems such as double-feed will result.

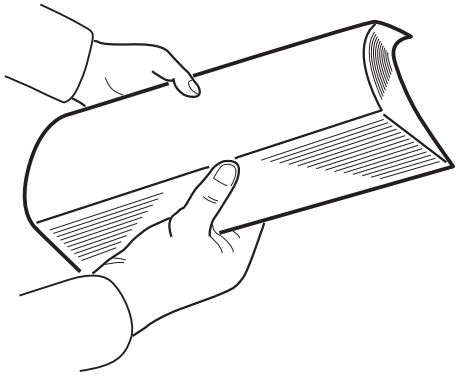

Note **In some cases, paper may not be fed smoothly into the folding plate due to the environment (temperature, humidity), paper thickness, paper type, paper grain direction, paper states (curled, etc.), and processing speed, etc., and as a result, the paper may not be folded properly.**
In such cases, lower the processing speed, or improve the paper states (curled, etc.) before use.

7-2. Precautions on Stacking Paper

- **Do not stack paper on the paper feed tray with the left and right sides of the paper unaligned or some sheets protruding out.**

  This unit has an automatic standard paper size detection function. It automatically detects paper size at the paper feed guides.
  Therefore, if paper is protruding out from the left or right side, it is unable to detect paper size accurately and may determine standard paper as non-standard. It may also result in problems such as paper feed errors and folding misalignment, etc.
  Be sure to align paper neatly when stacking.

- **Do not stack paper on the paper feed tray with the lead and trail edges unaligned or some sheets protruding out.**

  This will result in unstable paper feed, and result in problems such as paper feed errors and folding misalignment, etc.
  Be sure to align paper neatly when stacking.

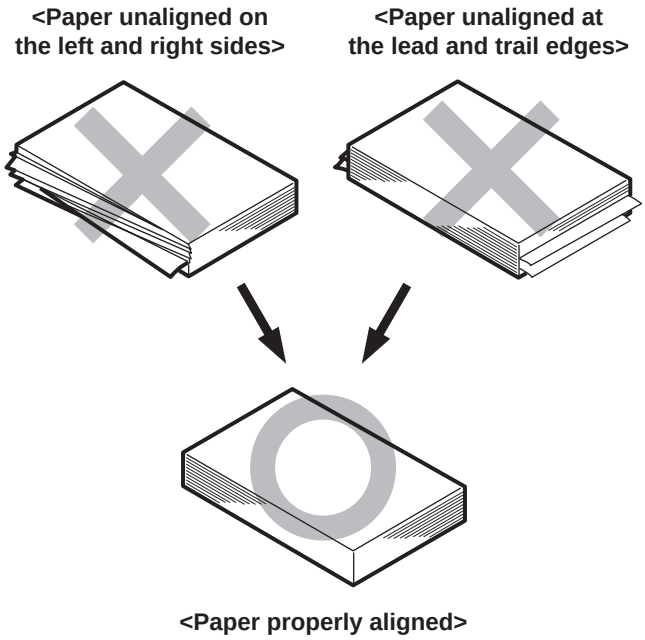

7-3. Automatic Detection of Paper Size

- Five standard paper sizes can automatically be detected by this unit: LGR, LGL, LTR, STMT, and INV.
  For paper to be automatically detected, paper must be set in the short edge feeding direction.

Note **For some paper, stacking paper on the paper feed tray in the long edge feeding direction will result in paper size detection error.**
(For example, if LTR paper is stacked in the long edge feeding direction on the paper feed tray, it will be detected as LGR size.)

- When paper is stacked on the paper feed tray according to the corresponding paper size on the tray scale, and the paper feed guides are secured at the scale position, the paper size is automatically detected. The detectable range is within ±0.28".

- When paper size is detected, it will be displayed on the left window.

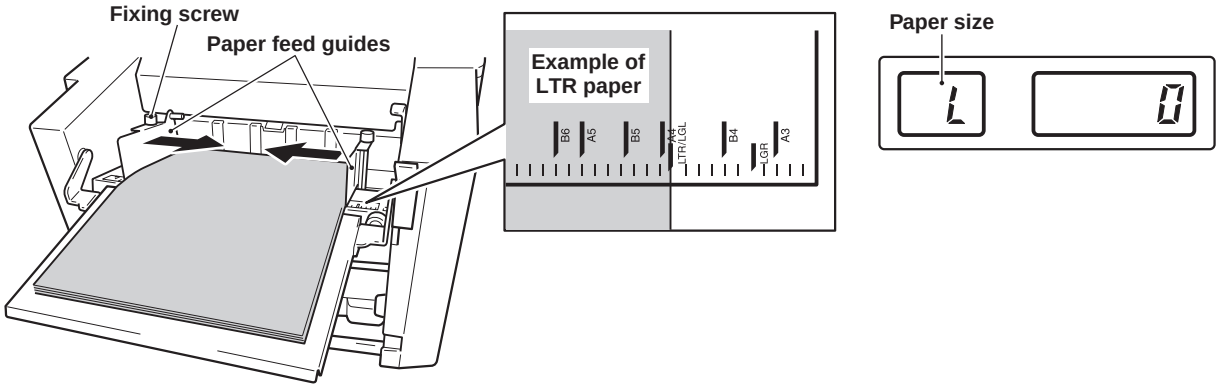

7-4. Checking the Front/Back, Top/End of Paper

Check how the paper was placed on the paper feed tray (front/back, top/end), because this will affect the folding misalignment which may occur.

<Example> When paper with a white front and black back is finished in the following folding modes

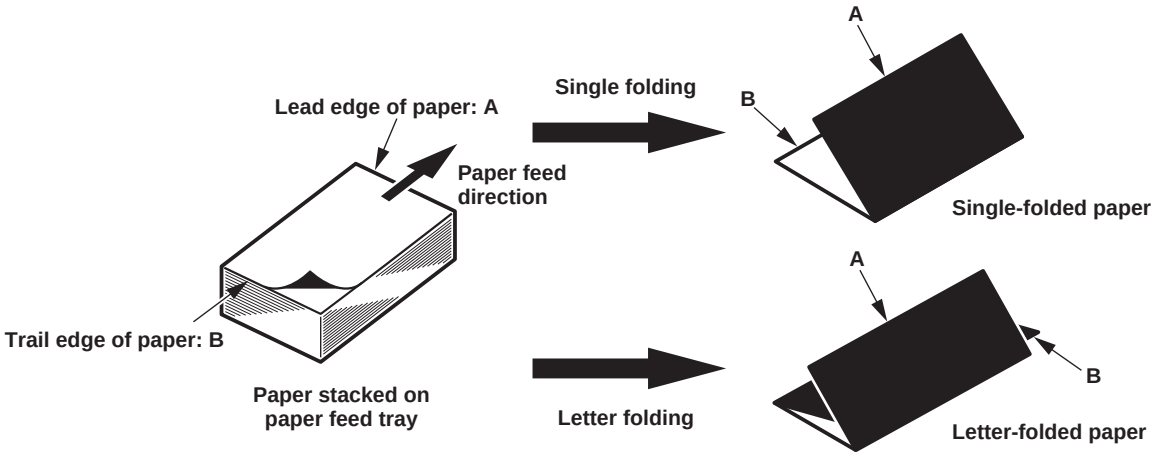

7-5. Using the "QUICK START"

The QUICK START at the end of this manual outlines the most common paper folding procedure **standard folding of standard paper** to facilitate use of this unit, after having read this instruction manual once.

Use it as follows.

- Enlarge pages 1/2 and 2/2 of the QUICK START on a copy machine, and paste them on the wall in front of the unit for reference when operating this unit.
- Copy pages 1/2 and 2/2 in the same size, and place them in a plastic file for reference when operating this unit.

Note **When adding comments or changing the contents of the QUICK START, give consideration to safety.**

8. PAPER FOLDING METHODS

The paper folding methods of this unit can broadly be divided into the following three types.

(1) Standard folding of standard paper

This is the basic paper folding operation of this unit. With this method, the “standard paper” designated by this unit is set to the standard folding mode displayed on the control panel and paper folding is performed.

(2) Standard folding of non-standard paper (folding by entering paper length)

With this method, the length of paper other than the standard paper designated by this unit (this is called “non-standard paper”) is registered, this paper is set to the standard folding mode displayed on the control panel, and paper folding is performed. The length of the paper registered is calculated to match the standard folding mode, and the positions (folding positions) of the folding stoppers of the folding plates are automatically set.

(3) Custom folding

Set the positions (folding positions) of the folding stoppers of folding plates 1 and 2 manually. As the stopper position (folding position) can be specified, it allows non-standard folding to be performed freely.

Note **There are certain restrictions (unfoldable areas) according to the paper length, folding plate length, etc. for the above methods. For specific details of folding methods and restrictions, refer to the following chapters on folding methods.**

“9. STANDARD FOLDING OF STANDARD PAPER” (☞ p.23)
“11. STANDARD FOLDING OF NON-STANDARD PAPER” (☞ p.35)
“12. CUSTOM FOLDING” (☞ p.38)

9. STANDARD FOLDING OF STANDARD PAPER

Standard folding of standard paper is the basic operation of this unit.

9-1. Standard Paper

The standard paper designated by this unit consists of the following five types: LGR, LGL, LTR, STMT, and INV.
All of these sizes are valid only when stacked on the paper feed tray in the short edge feeding direction.

Note **The above standard paper may not be usable for certain paper thickness in some cases. (Refer to "21. SPECIFICATIONS" (☞ p.59).)**

Paper size	Display	L × W
Ledger (LGR)	LL	17" × 11"
Legal (LGL)	LG	14" × 8.5"
Letter (LTR)	L	11" × 8.5"
Statement (STMT)	St.	8.5" × 7"
Invoice (INV)	IN	8.5" × 5.5"

9-2. Standard Folding Modes

Six standard folding modes are available as shown below.

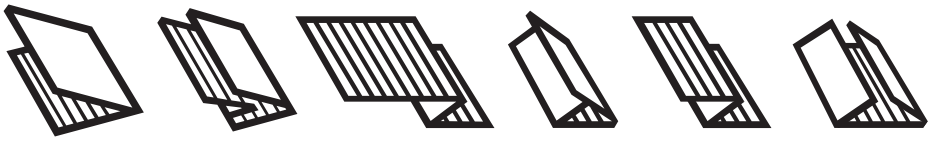

Single fold **Double fold** **Irregular accordion fold** **Letter fold** **Accordion fold** **Brochure fold**

9-3. Operation Procedure

1 Turn on the power switch.

⚠ WARNING

Do not touch the power switch with wet hands. Otherwise electric hazards may occur.

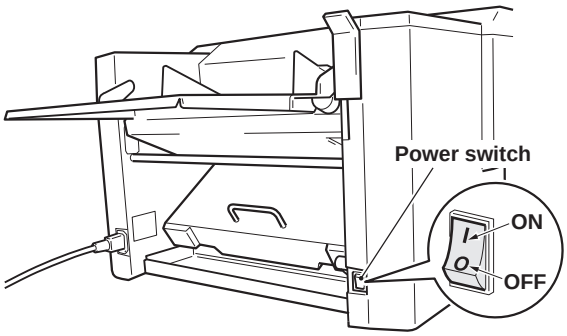

2 Stack paper on the paper feed tray.

- Do not overstack paper. Paper can be stacked up to a height of approx. 1.8".
- Push in the paper until the lead edge touches the paper feed inlet lightly.

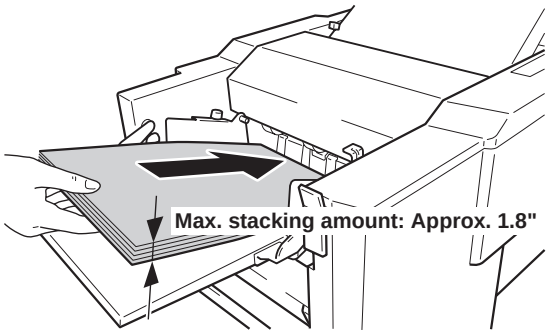

3 Move the paper feed guides to the corresponding paper size on the paper feed tray scale. Tighten the fixing screws to secure.

- The left and right paper feed guides move together.
- Be sure to tighten the fixing screws of the left and right paper feed guides. Otherwise, the guides will move while the unit is operating, causing folding misalignment along the sides of the paper.
- Be sure to adjust the paper feed guides to the paper feed tray scales. If the guides are positioned incorrectly, the automatic paper size detection function will not work, and the test key and start key, etc. will not operate.

Note **Do not press the paper with the paper feed guides too strongly. Otherwise, paper feed errors such as mis-feed will occur.**

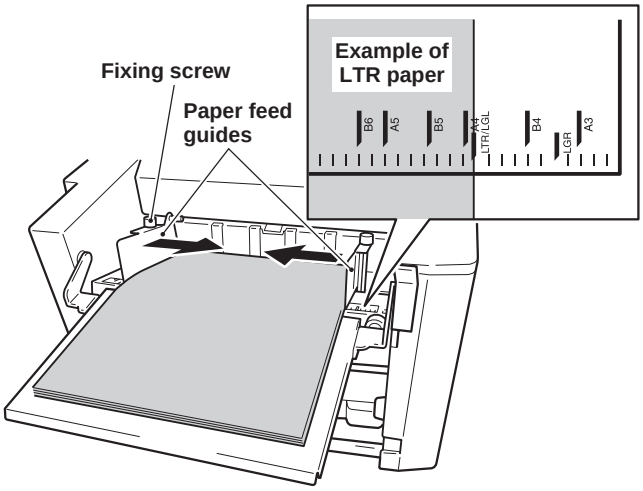

4 Lower the paper set lever and set the paper feed tray.

- Lowering the lever raises the tray to the paper feed position.
- Raising the lever lowers the tray to the paper stacking position.

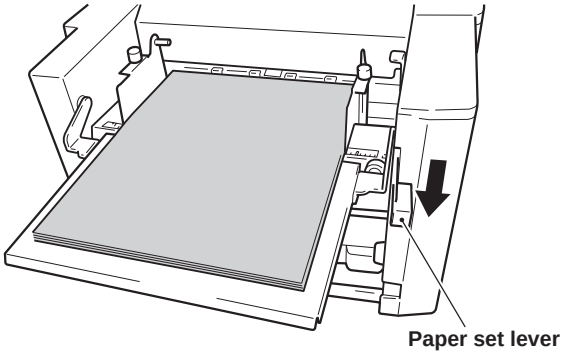

5 Check the paper size displayed on the left window.

- Paper size will not be displayed even if standard paper size is used if the paper feed guides are not set at the designated positions.
  Set the paper feed guides at the correct positions.

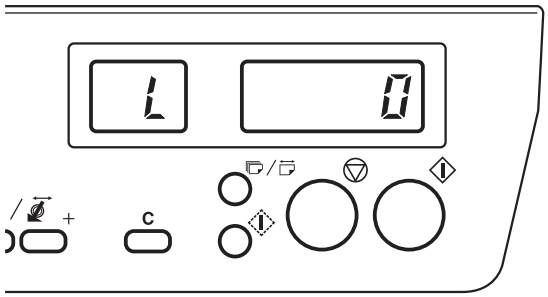

- To set the standard folding mode of non-standard paper, press the No. of sheets/Paper length key and switch to the mode for entering paper length.

See **For details on standard folding of non-standard paper, refer to "11. STANDARD FOLDING OF NON-STANDARD PAPER" (☞ p.35).**

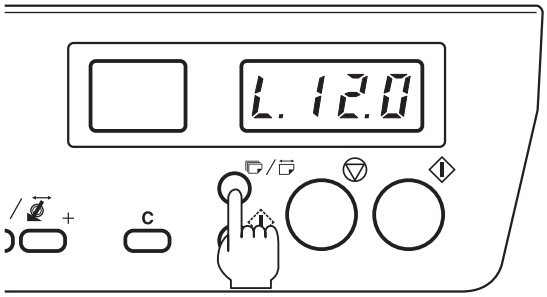

- To set the custom folding mode, press the custom folding registration key 1 or 2 until the buzzer sounds "pi.pi..." (about two seconds).

See **For details on custom folding, refer to "12. CUSTOM FOLDING" (☞ p.38).**

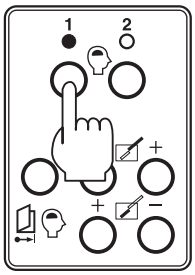

6 Press the folding mode key to select the folding mode.

- Each time the folding mode key is pressed, the standard folding lamp lights up in order from the leftmost single folding lamp towards the right.
- If custom folding data is registered, the custom folding registration lamp will automatically light up after the standard folding lamp.
  If not registered, it will not light up.

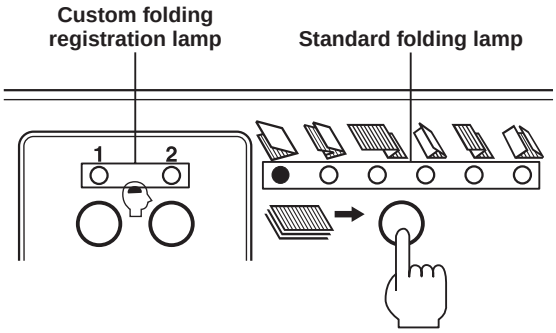

7 Set the paper feed pressure adjusting lever to “0”.

- Move the adjusting lever to the left and right while pulling upwards.
- If paper slips and mis-feed occurs, increase the paper feed pressure by one from “0” to “1”.
  Paper feed pressure increases as the scale value increases.
- If several sheets of paper are fed at the same time (double-feed), decrease the paper feed pressure by one from “0” to “–1”.

8 Open the top cover, and set the separating pressure adjusting dial to “0”.
After setting, close the top cover.

- If several sheets of paper are fed at the same time (double-feed), increase the paper separating pressure gradually in steps of 0.5.
  Paper separating pressure increases as the scale value increases.

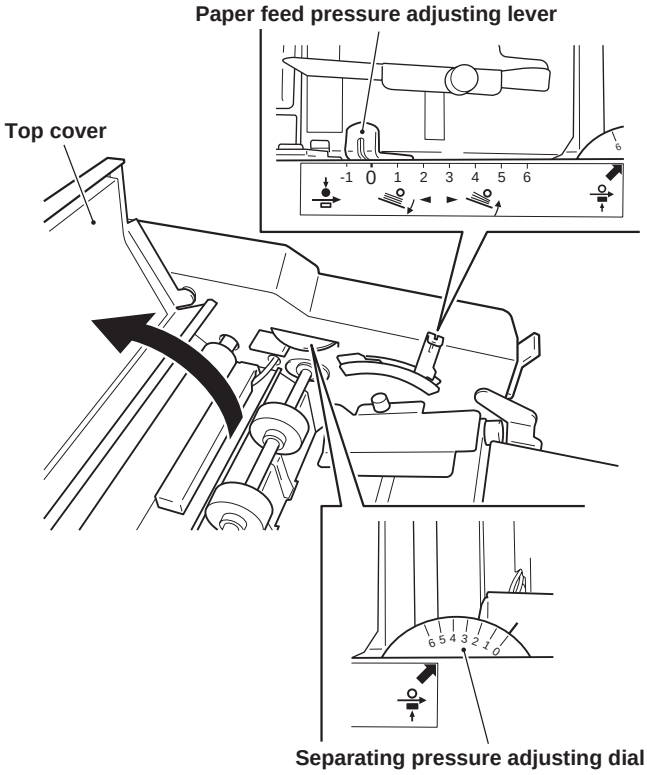

9 Press the speed key to set the processing speed.

- When using thin and flimsy paper, setting the maximum processing speed causes problems such as paper jam and deformed folding. Set a lower processing speed.
- When the power is turned on, the last processing speed used is displayed.

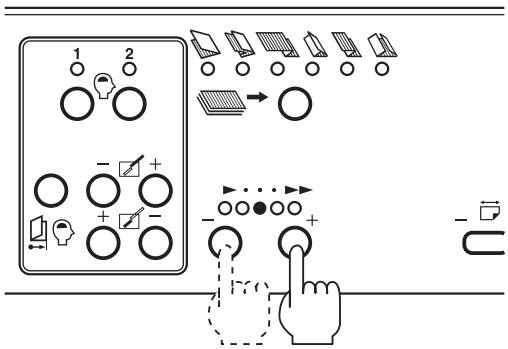

10 Press the test key to perform test folding.

- When the test key is pressed, the number in the right window blinks, and the folding stopper starts moving to the set position. When it completes moving, the number stops blinking and lights up, and test folding starts.
- Test folding feeds two sheets of paper and allows the finish to be checked.
- Test folded paper are not counted in the number of sheets processed.

Note **If the unit does not start even if the test key is pressed, the automatic paper size detection function may not be working. Check if the paper feed guides are at the appropriate paper size on the scale.**
When the automatic paper size detection function starts working, the paper size will be displayed on the left window.
(Refer to "7-3. Automatic Detection of Paper Size" (☞ p.20).)

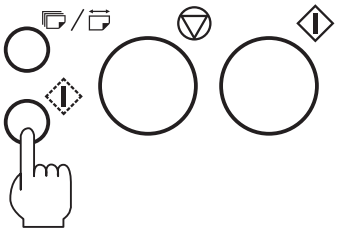

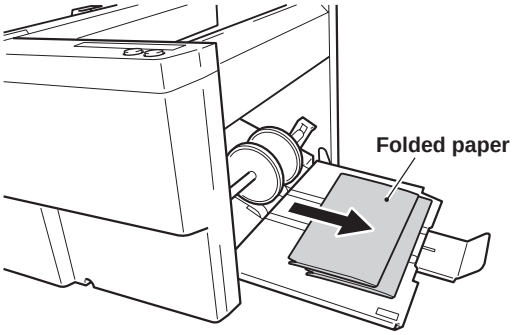

11 Check the finish of test folding.

- Check for folding misalignment using the second test folded sample.
- If folding problems occur, refer to the following pages according to the folded state.

Folding misalignment along the vertical length of the paper ..... (☞ p.29)
Folding misalignment along the sides of the paper ..... (☞ p.28)
Deformed folding ..... (☞ p.34)

<Normal folding>

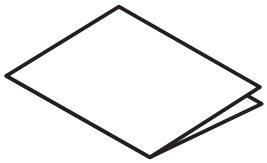

<Folding misalignment along vertical length of paper>

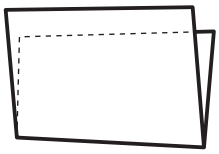

<Folding misalignment along sides of paper>

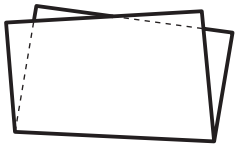

<Deformed folding>

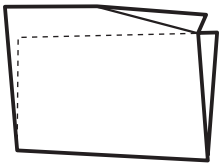

12 Select the counter type.

- The counter can be selected from “subtract counter” which displays the preset number of sheets to be folded and folds according to this value or “add counter” which displays the number of sheets already folded.
  With the subtract counter, the unit will automatically stop when the set number of sheets to be folded is reached. This method is convenient if the number of sheets to be folded has been decided.
- The count is displayed on the right window. When the subtract counter is selected, a period will be displayed at the bottom right. The number of digits displayed is three at maximum (999.) for the subtract counter and four at maximum (9999) for the add counter.

Note **When the power is turned ON, the counter will start counting from 0 by the add counter. To use the subtract counter, set the number of sheets to be processed every time the power is turned ON.**

Setting the subtract counter

① Check that the counter is displayed on the right window. If the paper length is displayed, press the No. of sheets/Paper length key to display the counter.

② Use the Paper length/Stacker roller position key and set the number of sheets to be processed between “1.” and “999.”.
Pressing the “+” key each time increases the number of sheets set by one, and pressing the “–” key decreases by one. To increase/decrease the value continuously, press the “+” or “–” key continuously.

Note **To reset the value to 0, press the clear key. However setting to 0 will set the add counter.**

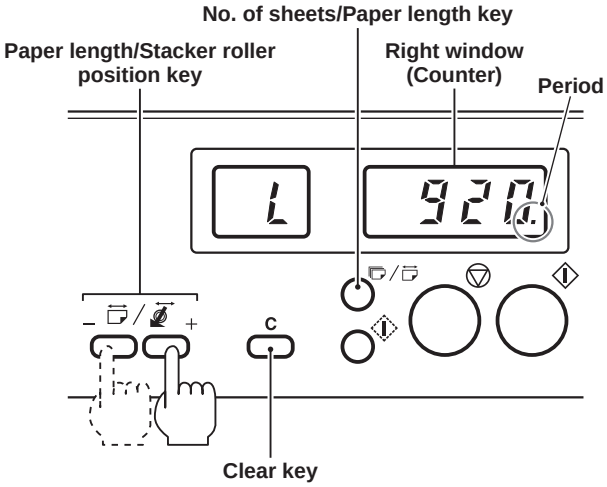

Setting the add counter

① Check that the counter is displayed on the right window. If the paper length is displayed, press the No. of sheets/Paper length key to display the counter.

② When the counter shows 0, no settings are required. If it shows a value other than 0, press the clear key to reset the counter to 0.

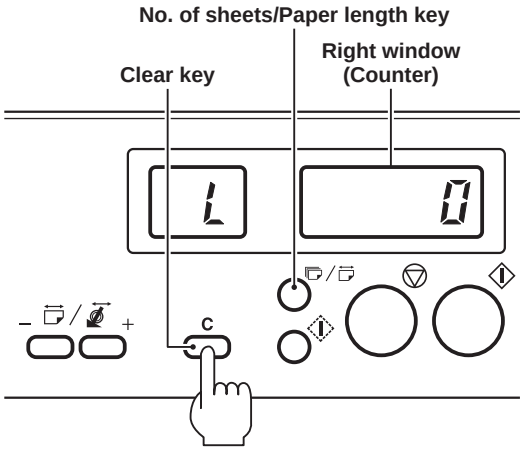

13 Press the start key to start folding.

- To cancel operations halfway through, press the stop key. Pressing the start key another time resumes operations.
- The buzzer will sound “pi…pi…” if the counter reaches 0 while using the subtract counter, and the unit will stop automatically. (The counter will once again show the set number of sheets to be processed.)
- If the paper feed tray runs out of paper, the buzzer sounds “pi.pi.pi”, and the unit will stop automatically.

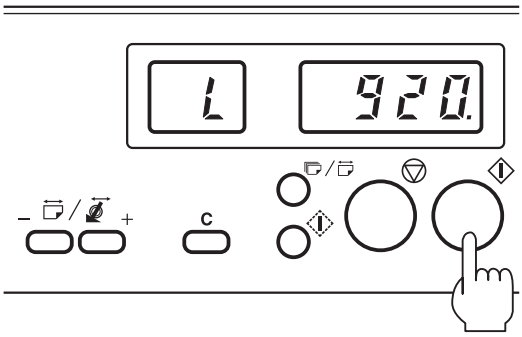

10. FOLDING MISALIGNMENT

Depending on the paper type, thickness, printing state, processing speed, etc., paper of the same size may be folded differently and folding misalignment may occur.
Folding misalignment consists of two types; “folding misalignment along the sides of the paper” and “folding misalignment along the vertical length of the paper”. Other than this, “deformed folding” may also occur due to paper characteristics, etc.

The following describes how to correct folding misalignments and deformed folding.

10-1. Correcting Folding Misalignment Along Sides of Paper

- When the folded paper is misaligned along the sides as shown in the figure due to slight misalignment when the paper was trimmed, paper printing state, dirty folding roller, etc., correct using the skew correction knob of the paper feed tray.

<Example of folding misalignment along sides of paper>

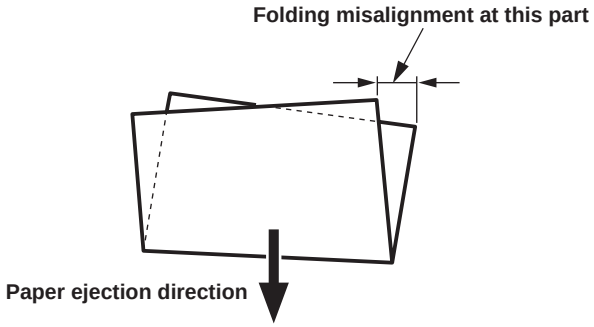

- Before adjusting with the skew correction knob, check that the paper feed guides are set correctly. Gaps between the paper and paper feed guides will cause folding misalignment along the sides to occur easily.

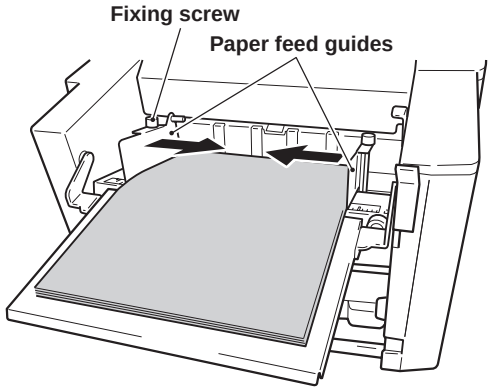

1 Rotate the skew correction knob and adjust.

- When the folding misalignment is as shown in Figure A, rotate the knob to the right (clockwise).

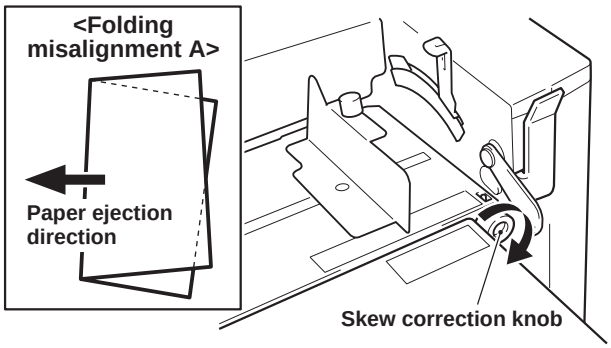

- When the folding misalignment is as shown in Figure B, rotate the knob to the left (counter-clockwise).

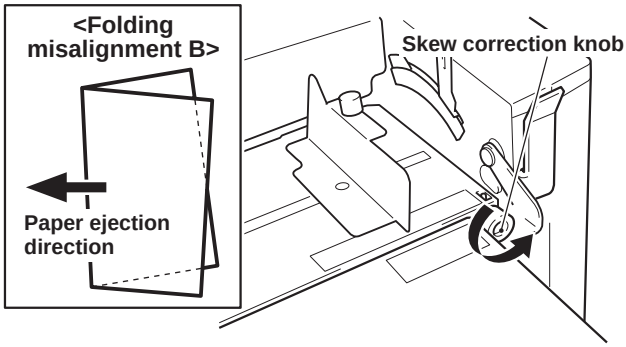

2 After completing folding operations, return the skew correction knob to the standard position.

- The position at which the round hole of the paper feed tray and pin match is the standard position.

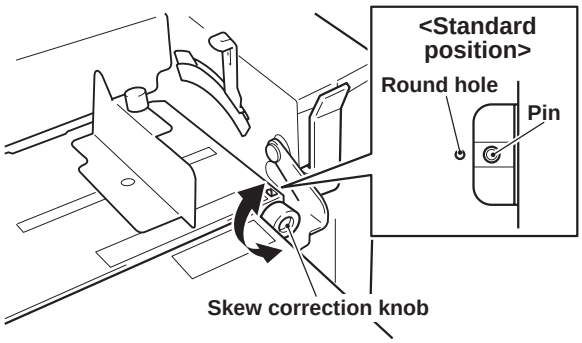

10-2. Correcting Folding Misalignment Along Vertical Length of Paper

- When the folded paper is misaligned along the vertical length as shown in the figure due to the paper thickness, type, printing state, etc., adjust the positions of the folding stoppers of folding plates 1 and 2 to correct the misalignment.

<Example of folding misalignment along vertical length of paper>

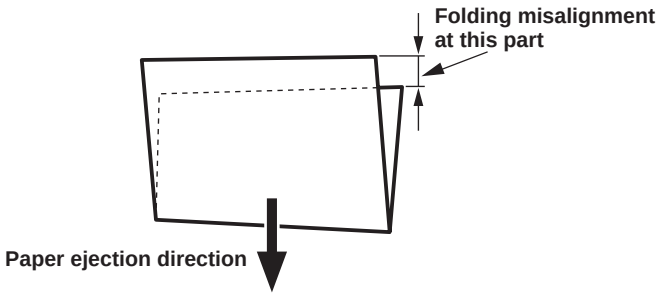

- Adjust the positions of the folding stoppers using the folding stopper adjusting keys of folding plates 1 and 2 on the control panel.
  Pressing the "+" key moves the folding stoppers of folding plates 1 and 2 in the Ⓐ direction of the figure. Pressing the "–" key moves in the Ⓑ direction of the figure.
  Each press moves the folding stopper by 0.005".
  (One folding stopper is provided inside folding plates 1 and 2 respectively. Folding stoppers cannot be seen from outside.)
- The value corrected using the folding stopper adjusting key is displayed on the right window. The left window displays "F1" when corrected using the folding plate 1 adjusting key and "F2" when corrected using the folding plate 2 adjusting key.

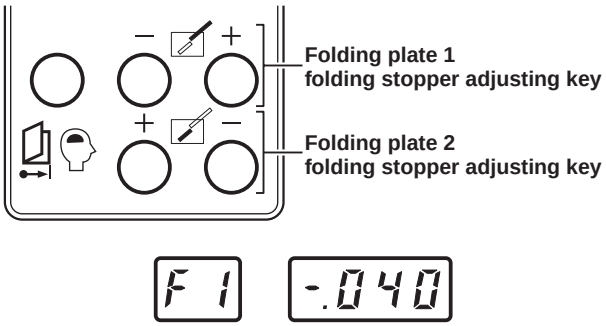

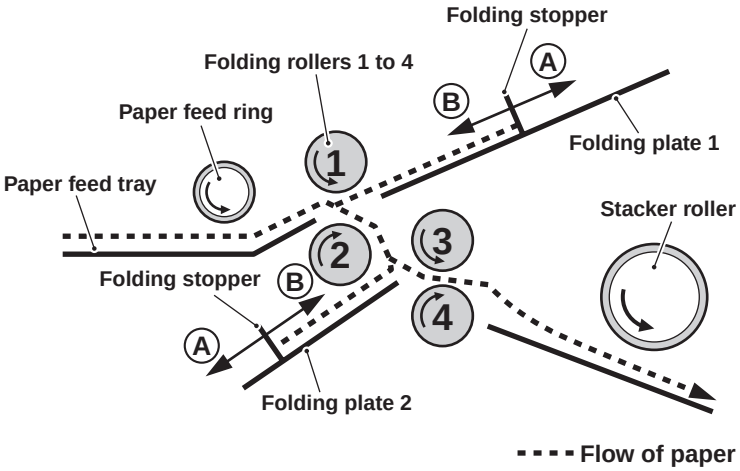

- Corrected values can be registered using the adjustment registration key.

See "◆ Adjustment registration procedure" (☞ p.32)

Note Corrected values cannot be registered in the standard folding of non-standard paper. To register the folding stopper position, use the custom folding registration function.

◆ Correction range

- For standard folding, the adjustable range using the folding stopper adjusting key is within ±0.2" from the center of the paper.
- If set exceeding ±0.2", the buzzer sounds “pi.pi.pi”, and the folding stoppers will stop at the ±0.2" position of the adjustable range.

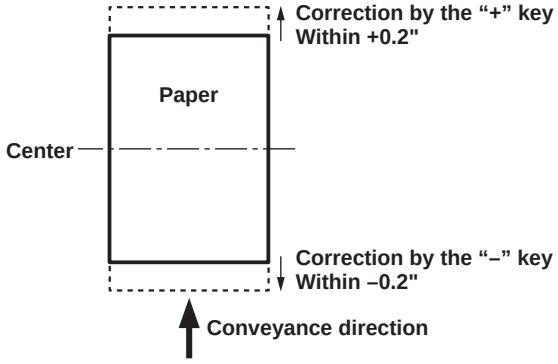

◆ Correction restrictions

- The positions of the folding stoppers of folding plates 1 and 2 may not be adjustable to ±0.2" according to the length of the paper used. This restriction is due to the length of the paper and length of folding plates 1 and 2.
  The restricted folding plate and correction details differ according to the folding mode and paper length. Refer to the following table.

Folding mode	Minimum paper length that can be used	Restricted range of paper length*	Restricted folding plate and correction details
Double fold	7.2"	7.2" to 8.1"	Correction by “–” key of folding plate 2
Irregular accordion fold	7.2"	7.2" to 7.4"	Correction by “–” key of folding plate 1
		7.2" to 8.1"	Correction by “–” key of folding plate 2
Letter fold	5.6"	5.6" to 6.0"	Correction by “–” key of folding plate 2
Accordion fold	5.6"	5.6" to 6.1"	Correction by “–” key of folding plate 2
Brochure fold	5.1"	16.8" to 17.0"	Correction by “+” key of folding plate 1
		16.7" to 17.0"	Correction by “+” key of folding plate 2

* Range of paper length which cannot be corrected to ±0.2". The correction value differs according to the paper length.

- If the correction value is within the restricted range when this correction value is set using the folding stopper adjusting key, the folding stoppers will stop at the maximum possible correction value position. Set a valid correction value again using the folding stopper adjusting key.

◆ Example of correcting folding misalignment along vertical length of paper by folding mode

Correct folding misalignment along the vertical length of the paper in standard folding using the folding stopper adjusting keys of folding plates 1 and 2, referring to the following example.

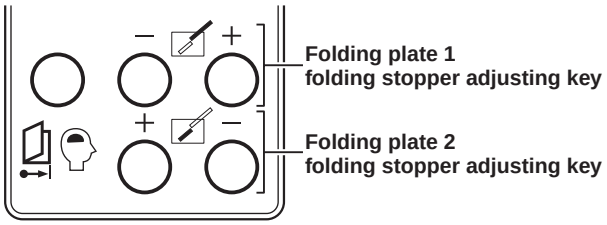

Note **The positions of the "+" and "–" folding stopper adjusting keys of folding plates 1 and 2 are located opposite to each other.**

Adjusting key of folding plate 1

Folding mode		State of folded plane A	Correction method
Single fold	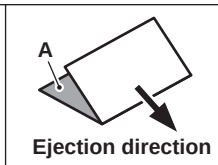	A is long	Press the "+" key.
		A is short	Press the "–" key.
Double fold	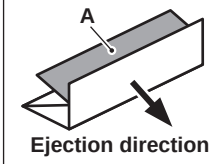	A is long	Press the "+" key.
		A is short	Press the "–" key.
Irregular accordion fold	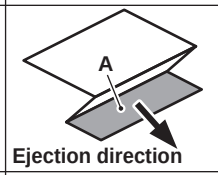	A is long	Press the "–" key.
		A is short	Press the "+" key.
Letter fold	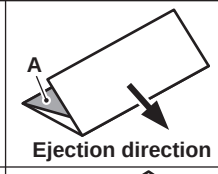	A is long	Press the "+" key.
		A is short	Press the "–" key.
Accordion fold	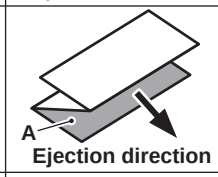	A is long	Press the "–" key.
		A is short	Press the "+" key.
Brochure fold	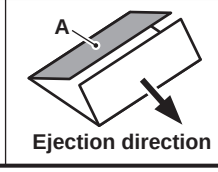	A is long	Press the "+" key.
		A is short	Press the "–" key.

Adjusting key of folding plate 2

Folding mode		State of folded plane B	Correction method
Single fold	∗ Folding plate 2 is not used in single folding.		
Double fold	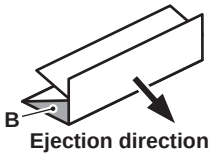	B is long	Press the "–" key.
		B is short	Press the "+" key.
Irregular accordion fold	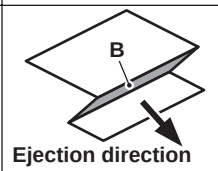	B is long	Press the "–" key.
		B is short	Press the "+" key.
Letter fold	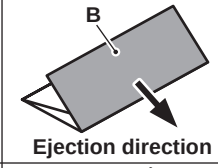	B is long	Press the "+" key.
		B is short	Press the "–" key.
Accordion fold	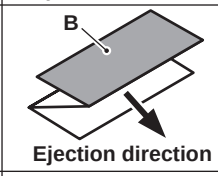	B is long	Press the "+" key.
		B is short	Press the "–" key.
Brochure fold	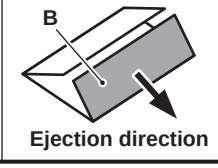	B is long	Press the "+" key.
		B is short	Press the "–" key.

- The folding stopper moves by 0.005" every time the folding stopper adjusting key is pressed. Pressing the adjusting key continuously moves the folding stopper continuously within the range set.
- The standard adjustable range is within ±0.2". Some paper may not be correctable in this range due to restrictions.

See **"◆ Correction restrictions" (☞ p.30)**

- When correction of more than ±0.2" from the standard paper size is required, consider such paper as non-standard paper.

See **"11. STANDARD FOLDING OF NON-STANDARD PAPER" (☞ p.35)**

◆ Adjustment registration procedure

- The adjustment value of folding misalignment along the vertical length of the paper can be registered using the adjustment registration key.
- A total of 30 different adjustment values can be registered (6 standard folding modes × 5 standard paper sizes (LGR, LGL, LTR, STMT, and INV)).
- By registering adjustment, no adjustments need to be performed when performing folding operations under the same conditions (paper, folding mode, processing speed, etc.) as those at registration.

Note **The adjustment registration function cannot be used for standard folding of non-standard paper and custom folding. Use the custom folding registration function.**

1 Stack paper on the paper feed tray, and set the paper feed guides.

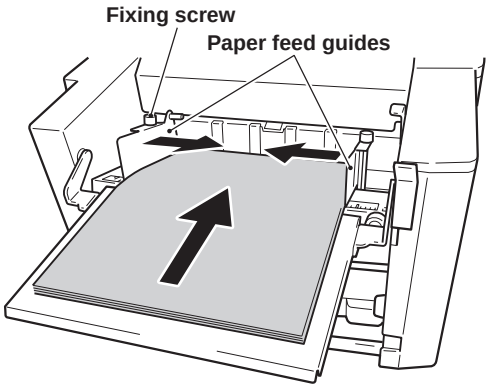

2 Lower the paper set lever and set the paper feed tray.

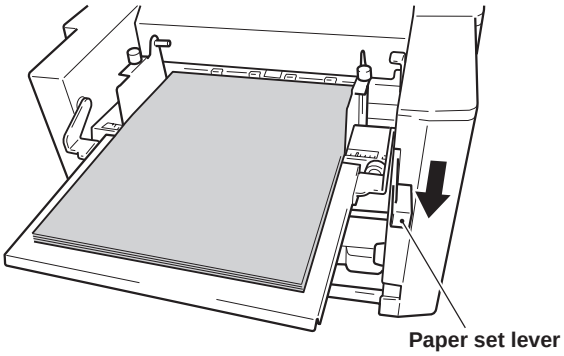

3 Press the folding mode key to select the folding mode.

- Each time the folding mode key is pressed, the standard folding lamp lights up in order towards the right. Folding modes whose lamps are blinking indicate that adjustment registration has been performed.

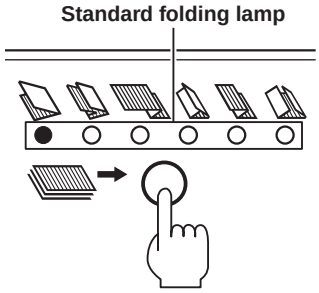

4 Press the test key to perform test folding.

- Test folded paper are not counted in the number of sheets processed.

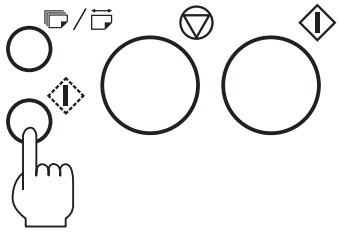

5 Check for folding misalignment along the vertical length of the paper from the test folding results.

- Check for folding misalignment using the second test folded sample.

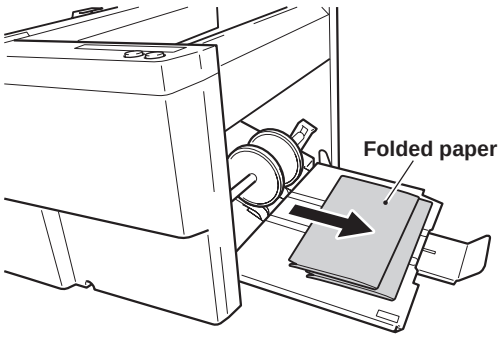

6 Correct folding misalignment along the vertical length of the paper using the folding stopper adjusting keys of folding plates 1 and 2. (☞ p.29)

7 After adjusting the folding misalignment, press the adjustment registration key until the buzzer sounds “pi.pi...” (about two seconds).

- When adjustment registration completes, the lamp of the folding mode selected stops lighting and starts to blink.
- The adjustment value data registered is preserved even after the power is turned off.

Blinking (End of adjustment registration)

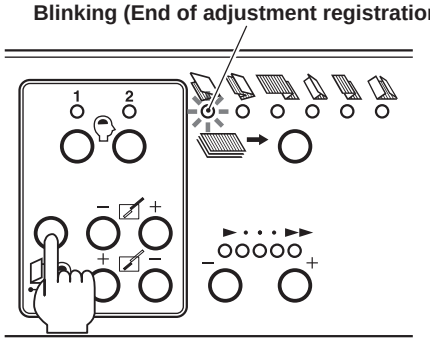

Correcting adjustment registration data

When the registration data of the paper size and folding mode to be corrected is set again and registered according to the above steps **1** to **7**, the previous data will be rewritten.

Erasing adjustment registration data

- Display the registration data of the paper size and folding mode to be erased, and press the adjustment registration key until the buzzer sounds “pi.pi...” for about two seconds, and continue pressing for another two seconds until the buzzer sounds “pi...” (total four seconds).
- When the registration data is erased, the lamp of the folding mode selected stops blinking and lights up.

Note **The adjustment registration data must be erased by registered paper size and folding mode. The data cannot be erased for all sizes and modes together.**

Lit (When adjustment registration is erased)

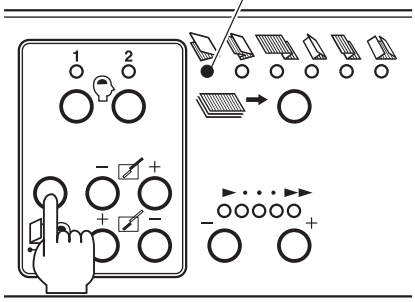

10-3. Correcting Deformed Folding

The paper fed to the folding plates may be folded without reaching the folding stoppers inside the folding plates due to the using environment (temperature, humidity), paper thickness, paper type, paper grain direction, paper state such as curling, processing speed, etc., resulting in deformed folding.
If this occurs, check the following.

<Example of deformed folding>

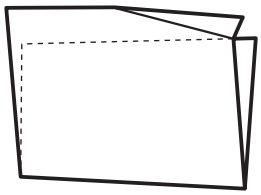

(1) Is appropriate paper within the specifications used?

Do not use paper outside the specifications. Particularly, deformed folding occurs frequently in the use of thin, flimsy paper not appropriate for the paper folder.

See **"21. SPECIFICATIONS" (☞ p.59)**

(2) Is the processing speed too fast?

Lower the processing speed when deformed folding occurs for thin and flimsy paper.

(3) Was the paper fanned appropriately prior to stacking on the paper feed tray?

Fan paper well prior to stacking.

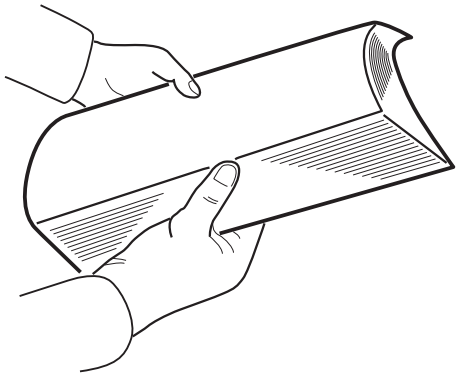

(4) Is the paper stacked correctly on the paper feed tray?

Stack paper on the paper feed tray after aligning well, and set the paper feed guides at the correct positions. Also tighten the fixing screws of the paper feed guides firmly.

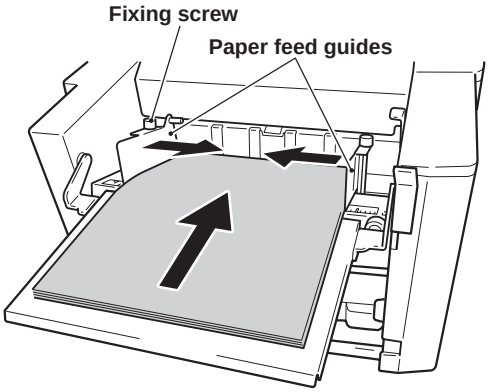

11. STANDARD FOLDING OF NON-STANDARD PAPER

Standard folding of non-standard paper is the process of registering the length of non-standard paper, setting the paper to a standard folding mode (six types) displayed on the control panel.

Non-standard paper

Paper other than the five standard paper specified by this unit LGR, LGL, LTR, STMT, and INV are called non-standard paper.

Note **Standard paper size is the size of the paper stacked on the paper feed tray in the short edge feeding direction. Standard paper which is stacked on the paper feed tray in the long edge feeding direction is considered non-standard paper.**

Standard folding

Six standard folding modes are available as shown below.

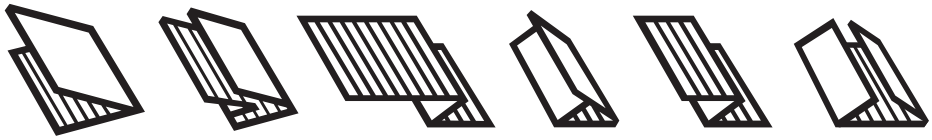

Single fold **Double fold** **Irregular accordion fold** **Letter fold** **Accordion fold** **Brochure fold**

11-1. Paper Size Restrictions

Paper sizes which can be used are the sizes within the range shown on the right.
( ) shows the minimum foldable size under conditions given.

See **"15-3. Folding Small Size Paper" (☞ p.46)**

Note **The paper sizes which can be used may vary with the paper type, thickness, and printing state.**

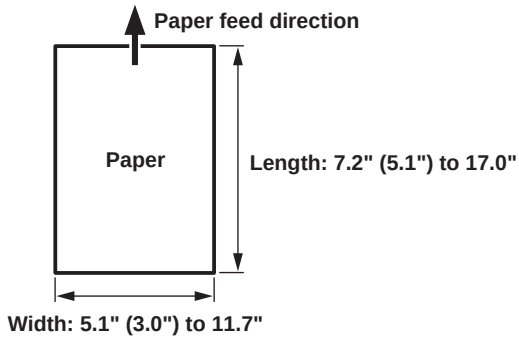

11-2. Operation Procedure

1 **Stack paper on the paper feed tray, and set the paper feed guides.**

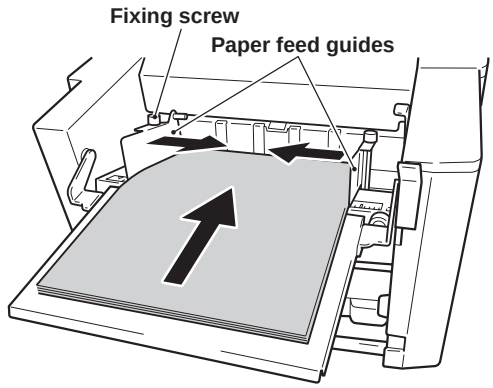

2 Lower the paper set lever and set the paper feed tray.

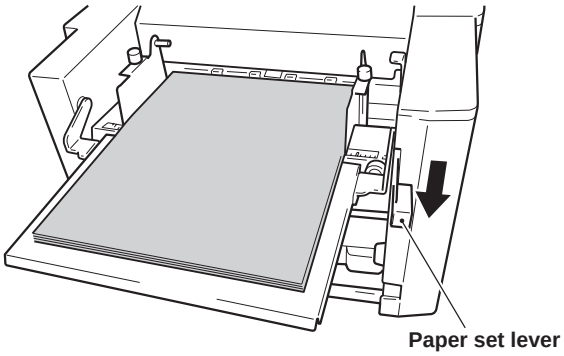

3 Press the No. of sheets/Paper length key and switch to the mode for entering the paper length.

- "L. ***" is displayed on the right window. ("***" is the value in the previous use.)

Note **Using non-standard paper in settings for standard paper will result in detection errors due to the priority functioning of the automatic paper size detection, and the unit will not operate.**

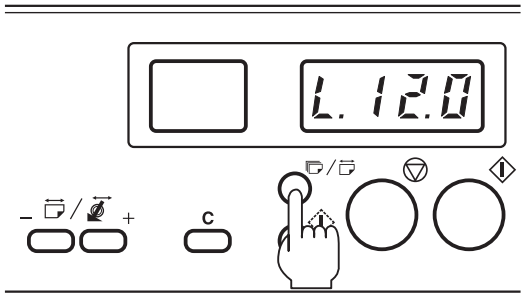

4 Measure the length of the non-standard paper used, and enter the length using the Paper length/Stacker roller position key.

- Pressing the "+" key increases the value, and pressing the "–" key decreases the value.
- The paper length which can be entered ranges from 5.1" to 17.0".

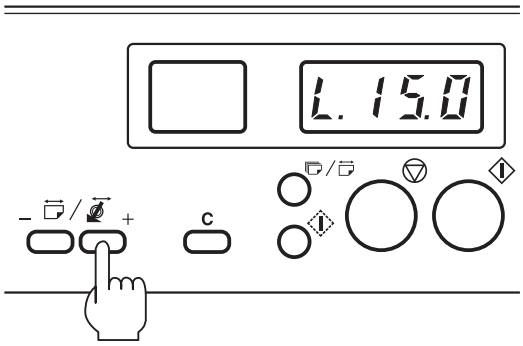

5 Register the entered paper length.

- After entering the paper length, continue pressing the No. of sheets/Paper length key until the buzzer sounds "pi.pi..." (about two seconds).
- When registration completes, "L.P" is displayed on the left window, and the right window switches from the paper length to the number of sheets to be processed.

Note **The paper length data registered is preserved even after the power is turned off.**

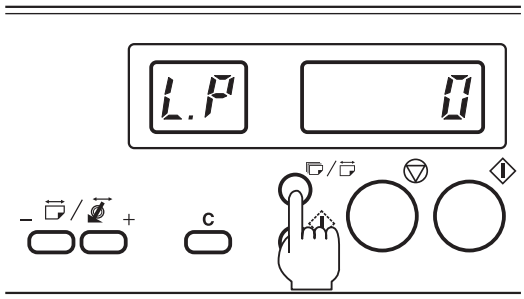

6 Press the folding mode key to select the folding mode.

- The registered paper length is calculated to match the selected standard folding mode, and the positions (folding positions) of the folding stoppers of folding plates 1 and 2 are calculated.

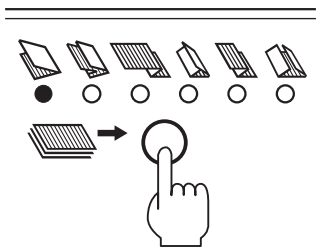

7 Press the test key to perform test folding.

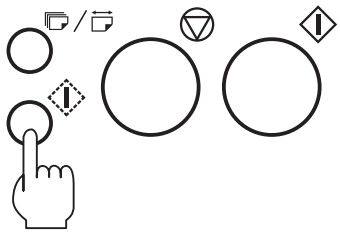

- The folding stoppers of folding plates 1 and 2 move to the folding positions calculated in step **6**, and test folding starts.
- Test folded paper are not counted in the number of sheets processed.

8 Check the finish of test folding.

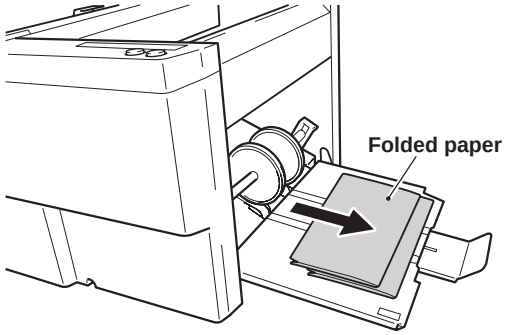

- Check the finish using the second test folded sample.
- When folding misalignment occurs, refer to **"10. FOLDING MISALIGNMENT" (☞ p.28)**.

Note **In the standard folding of non-standard paper, the positions of the folding stoppers can be adjusted, but the adjustment values cannot be registered. To register the positions of the folding stoppers, use the custom folding registration function. (Refer to "12. CUSTOM FOLDING" (☞ p.38).)**

Other steps are the same as standard folding of standard paper.

See **"9. STANDARD FOLDING OF STANDARD PAPER" (☞ p.23)**

To return to standard paper standard folding settings

Press the No. of sheets/Paper length key.
"L.P" displayed on the left window disappears.

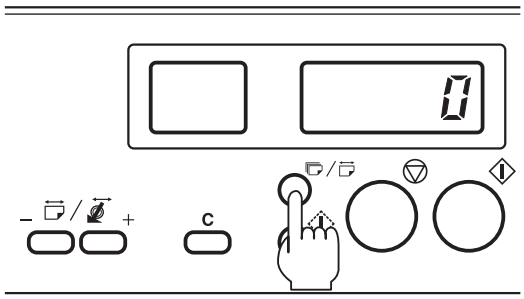

12. CUSTOM FOLDING

Custom folding is the method of folding paper by setting the positions (folding positions) of the folding stoppers of folding plates 1 and 2 manually. As the folding position can be specified, folding methods not available with standard folding can be performed freely.

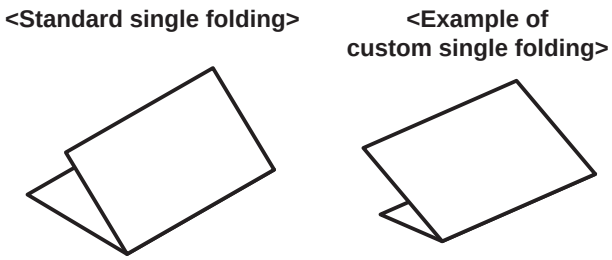

12-1. Paper Size Restrictions

Paper sizes which can be used are the sizes within the range shown below.
( ) shows the minimum foldable size under conditions given.

Note **The paper sizes which can be used may vary with the paper type, thickness, and printing state.**

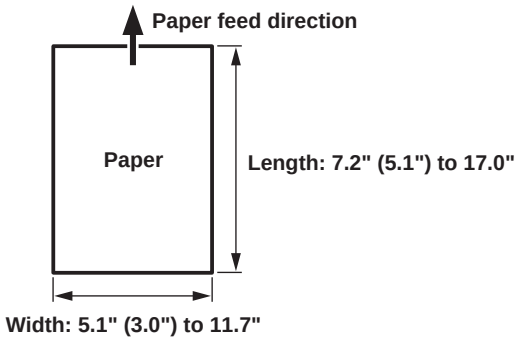

However, the length of the folded plane (see figure below) which can be folded by folding plates 1 and 2 is restricted.

Folding plate 1: 1.65" to 12.79"
Folding plate 2: 0"*/1.85" to 8.54"

* As folding plate 2 is not used in single folding, it is 0".

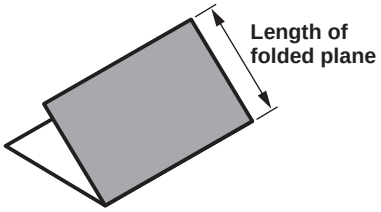

Note **Incorrectly measuring the paper length or setting the folding stopper position can cause paper jamming inside the folding plate. If paper jams, refer to "17-3. When Paper Jams Inside Folding Plate" (☞ p.49).**

12-2. Operation Procedure

The following describes the custom folding procedure taking accordion fold as an example.

1 **Prepare a sample of the required accordion fold manually with the paper used.**

2 **Measure the dimensions of the folded planes A and B of the sample, and folded paper length C.**

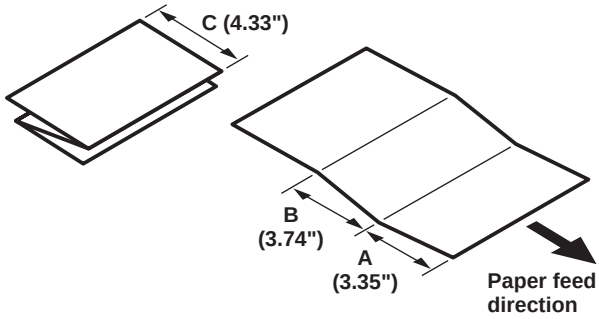

3 **Press the custom folding registration key 1 or 2 until the buzzer sounds "pi.pi..." (about two seconds) to switch to the custom folding mode.**

Note **Be sure to press the custom folding registration key before starting custom folding settings.**

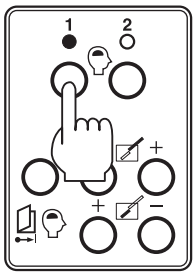

4 **Stack paper on the paper feed tray, and set the paper feed guides.**

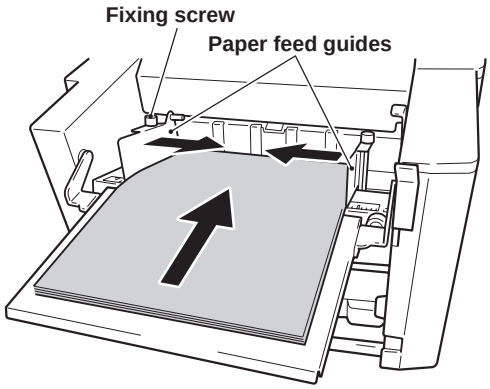

5 Lower the paper set lever and set the paper feed tray.

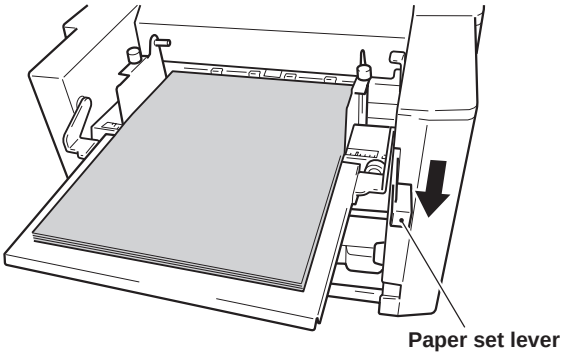

6 Set the folding stopper positions of folding plates 1 and 2.

- Press the "+" or "–" key of the folding plate 1 folding stopper adjusting key and move the folding stopper to the measured dimensions A (3.35") of the sample.
  "F1" which means folding plate 1 is displayed on the left window, and the position of the folding stopper is displayed on the right window in inch.
- Press the "+" or "–" key of the folding plate 2 folding stopper adjusting key and move the folding stopper to the measured dimensions B (3.74") of the sample.
  "F2" which means folding plate 2 is displayed on the left window, and the position of the folding stopper is displayed on the right window in inch.

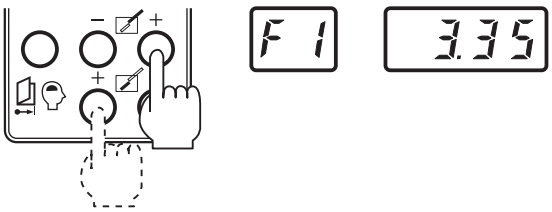

Note **The "F1" and "F2" on the left window and folding stopper position on the right window are displayed only while the adjusting key is pressed. When the key is released, the left window displays "CF" and the right window displays the number of sheets to be processed.**

7 Set the position of the stacker roller.

- The position of the stacker roller needs to be changed according to the folded paper length.
- Pressing the "+" or "–" key of the Paper length/Stacker roller position key while pressing the stop key displays "roL. 1 to 6" on the right window. The stacker roller then moves to the position displayed.
  Refer to the following table for approximate set positions.

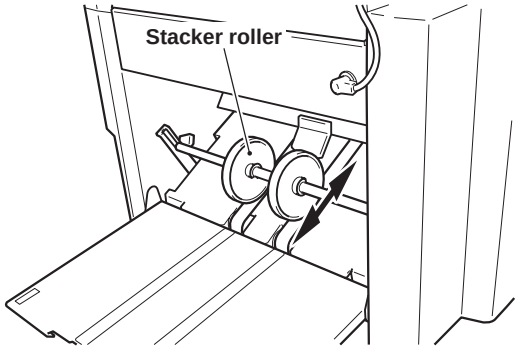

Approximate stacker roller set position

Right window display	Folded paper length
roL.1	To 3.35"
roL.2	3.36" to 4.13"
roL.3	4.14" to 4.72"
roL.4	4.73" to 5.31"
roL.5	5.32" to 5.91"
roL.6	From 5.92"

- In this example, the folded paper length C is 4.33". Therefore select "roL.3" by pressing the Paper length/ Stacker roller position key while pressing the stop key.

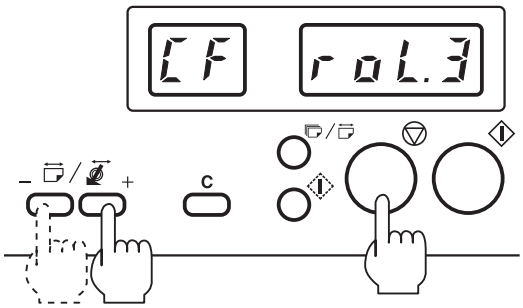

8 Press the test key to perform test folding.

- Test folded paper are not counted in the number of sheets processed.

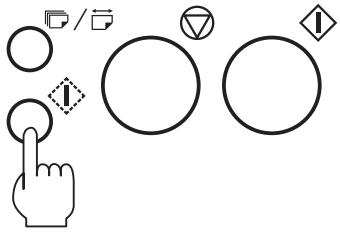

9 Check the finish of test folding.

- Check the finish using the second test folded sample.
- If the folding position needs to be adjusted, set the position of the folding stopper again using the folding stopper adjusting keys of folding plates 1 and 2.
- If paper is not ejected smoothly, change the position of the stacker roller.

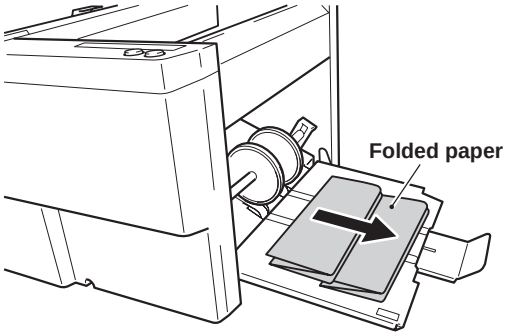

10 After completing all settings, register the custom folding setting.

- Continue pressing the custom folding registration key 1 or 2 until the buzzer sounds “pi.pi...” (about two seconds).
- The registered data is preserved even after the power is turned off.

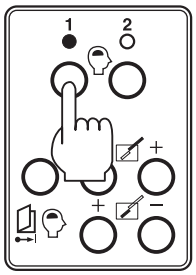

Other steps are the same as standard folding of standard paper.

See “9. STANDARD FOLDING OF STANDARD PAPER” (☞ p.23)

13. CROSS FOLDING

Cross folding is folding **single-folded paper** another time as shown in the figure. Many cross folding styles are available according to settings.

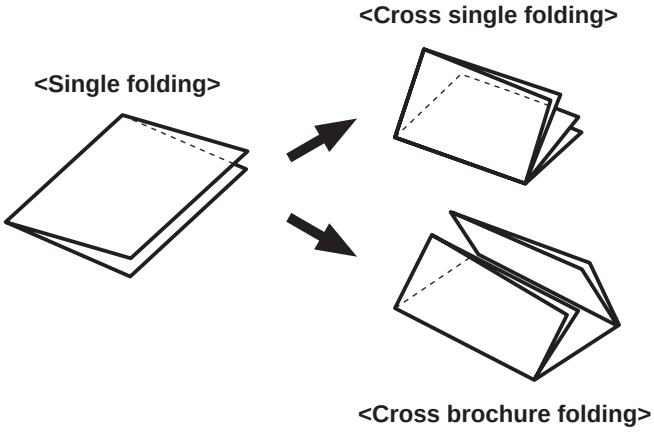

13-1. Cross Folding Methods

The following three cross folding methods are available on this unit.

(1) Cross folding of standard paper

Standard paper consists of five types LGR, LGL, LTR, STMT, and INV (short edge feeding of paper) and is paper whose size can be automatically detected.

(2) Cross folding of non-standard paper

Non-standard paper is paper other than standard paper specified by this unit. It is paper within the following size range.
( ) shows the minimum foldable size under conditions given.

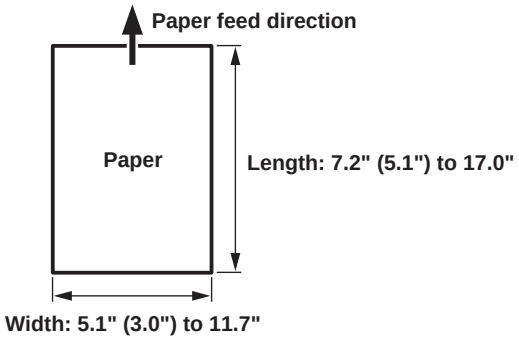

(3) Cross folding of paper at desired folding position

This is the cross folding of standard and non-standard paper at the desired folding position. Both standard and non-standard paper are processed in the same way, and the folding position is registered in the custom folding mode.

13-2. Precautions on Cross Folding

Pay attention to the following in cross folding.

- **The maximum thickness of paper used is 28 lb.**

  The maximum thickness depends on conditions such as using environment (temperature, humidity), paper size, paper type, paper grain direction, paper printing state, etc.

- **Press along the folded line of single-folded paper with the fingers.**

  If the folded line is not folded properly, paper feed will be unstable.

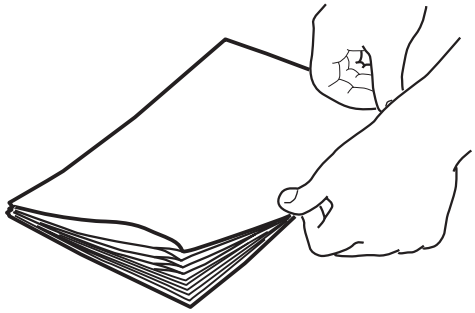

Note **Paper ∑dent and folding misalignment along the sides of the paper may occur if the folded line of single-folded paper is not folded properly or according to the using environment (temperature, humidity), paper thickness, paper size, paper type, paper grain direction, etc. This is not a malfunction of the unit.**

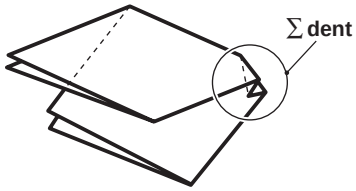

13-3. Cross Folding of Standard Paper

The following describes the cross folding of standard paper, taking cross single folding shown in the figure as an example.

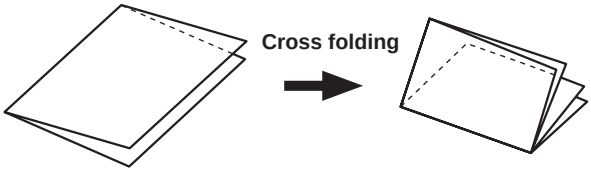

1 **Single fold standard paper according to the procedure of "9. STANDARD FOLDING OF STANDARD PAPER" (☞ p.23).**

2 **To prevent folding misalignment along the sides of the paper and feed paper smoothly, fold the folded line of the single-folded paper firmly with the fingers.**

3 **Stack the single-folded paper on the paper feed tray with the folded line facing the left, and set the paper feed guides.**

- Do not stack too many sheets of paper on the paper feed tray, the amount of which should be about half the height of the paper feed guide (approx. 1.0").
- Push in the paper until the lead edge touches the paper feed inlet lightly.

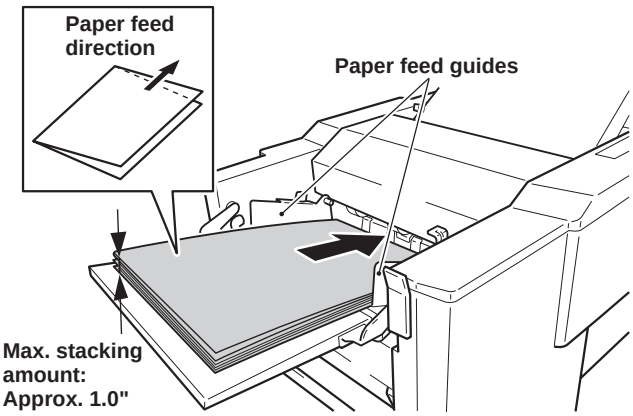

4 **Open the top cover, move the auxiliary paper feed ring (movable) to the folded line of the paper, and secure it.**

- Move the auxiliary paper feed ring by loosening the set knob. After moving, tighten the set knob to secure.

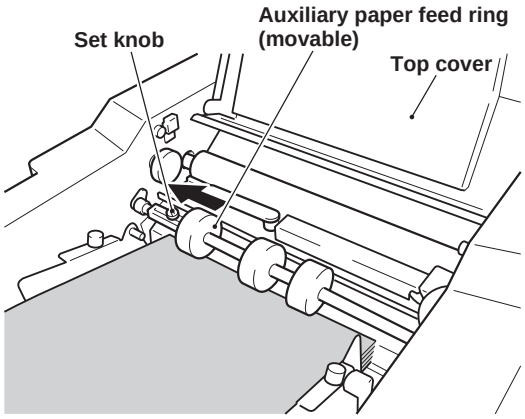

5 **Set the separating pressure adjusting dial to "0".**

- Set the paper separating pressure as low as possible. Setting it high will cause the single-folded paper to open during paper feed, resulting in paper feed error. Paper separating pressure decreases as the scale value decreases.

6 **Set the paper feed pressure adjusting lever to "3".**

- Set the paper feed pressure within the "3" to "5" range on the scale.
- If paper slips and mis-feed occurs, increase the paper feed pressure to "4" or "5".
  Paper feed pressure increases as the scale value increases.

7 **Attach the cross folding guide stored inside the top cover to the paper feed guide on the left side.**

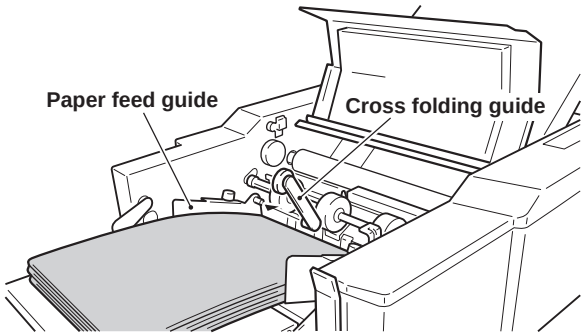

8 **Close the top cover.**

9 **Place the weight roller of the cross folding guide on the folded line.**

Note: To replenish paper, lift the cross folding guide.

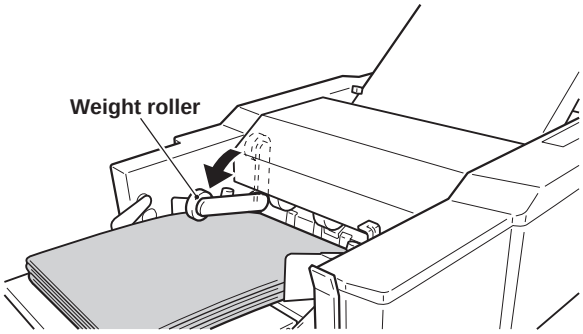

10 **Lower the paper set lever and set the paper feed tray.**

11 **Set the folding mode to single folding, perform test folding, and check the finish.**

Other steps are the same as standard folding of standard paper.

See "9. STANDARD FOLDING OF STANDARD PAPER" (☞ p.23)

13-4. Cross Folding of Non-standard Paper

1 **Single fold non-standard paper according to the procedure of "11. STANDARD FOLDING OF NON-STANDARD PAPER" (☞ p.35).**

2 **Press the No. of sheets/Paper length key and switch to the mode for entering paper length.**

3 **Measure the length of the single-folded paper, and enter the length using the Paper length/Stacker roller position key.**

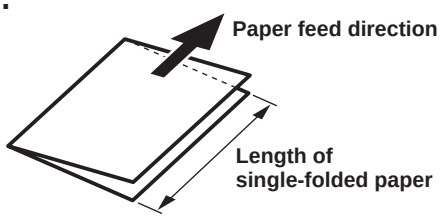

4 **Press the No. of sheets/Paper length key until the buzzer sounds "pi.pi..." (about two seconds), to register the paper length.**

5 **Perform steps 2 to 11 of "13-3. Cross Folding of Standard Paper" (☞ p.42).**

Other steps are the same as standard folding of standard paper.

See "9. STANDARD FOLDING OF STANDARD PAPER" (☞ p.23)

13-5. Cross Folding Paper at the Desired Folding Position

1 **After registering custom folding according to the procedure of "12. CUSTOM FOLDING" (☞ p.38), single fold paper in the custom folding mode.**

Note: Set the folding plate 1 folding stopper position as desired when registering custom folding. Set the folding plate 2 folding stopper position to 0" as folding plate 2 is not used in single folding.

2 **Register the single-folded paper for custom folding at the desired folding position according to the procedure of "12. CUSTOM FOLDING" (☞ p.38) again.**

3 **Perform steps 2 to 11 of "13-3. Cross Folding of Standard Paper" (☞ p.42).**

Other steps are the same as standard folding of standard paper.

See "9. STANDARD FOLDING OF STANDARD PAPER" (☞ p.23)

14. USING ART PAPER AND COATED PAPER

14-1. Characteristics of Art Paper and Coated Paper

Art paper and coated paper often stick to each other due to the printing ink and become difficult to separate, resulting in double-feed. When using these types of paper, follow the procedure below.

Note **Some recycled art paper and coated paper may be flimsy and inappropriate for folding.**

14-2. Operation Procedure

1 Fan the paper well.

Note **Art paper and coated paper need to be fanned well compared to fine quality paper such as copy paper.**

2 Stack paper on the paper feed tray after neatly aligning the paper, and set the paper feed guides.

- For precautions on paper, refer to **"7. PRECAUTIONS PRIOR TO USE" (☞ p.19)**.

Note **Do not stack too many sheets of paper on the paper feed tray, the amount of which should be about half the height of the paper feed guide (approx. 1.0"). If too many sheets are stacked, the paper will stick to each other from its weight and become difficult to separate, resulting in double-feed.**

3 Set the paper feed pressure adjusting lever to "3".

- Set the paper feed pressure within the "3" to "5" range on the scale.
- If paper slips and mis-feed occurs, increase the paper feed pressure to "4" or "5".
  Paper feed pressure increases as the scale value increases.

4 Open the top cover, and set the separating pressure adjusting dial to "2.5". After setting, close the top cover.

- If double-feed occurs, increase the paper separating pressure by 0.5 at a time.
  Paper separating pressure increases as the scale value increases.

Note **Do not use fine quality paper such as copy paper with the paper feed pressure and paper separating pressure settings for art paper and coated paper. Due to the high paper feed pressure, double-feed occurs more easily. In addition, due to the high paper separating pressure, the paper may be damaged at the lead edge. When using fine quality paper, always return to paper feed pressure and paper separating pressure settings to levels suitable for fine quality paper.**

5 Press the test key to perform test folding, and check the finish.

- If deformed folding occurs, the paper may not have reached the folding plate folding stopper. One solution is to lower the processing speed.

Other steps are the same as standard folding of standard paper.

See **"9. STANDARD FOLDING OF STANDARD PAPER" (☞ p.23)**

15. USING SPECIAL PAPER

15-1. Double Folding Thick Paper

When double folding fine quality paper larger than 10" in width and thicker than 28 lb, the stiffness of the paper makes it difficult for it to enter between the two folding rollers.
For such paper, set the thick paper mode.

Note **This mode is intended only for thick paper. Do not use it for folding other types of paper.**
Use of this mode results in unstable paper feed, and quickens wear of parts such as the paper feed ring.

◆ *Thick paper mode*

In this mode, the folding rollers rotate quickly to help paper enter between the folding rollers.

Setting the thick paper mode

Press the "+" speed key and set the maximum processing speed, and press it again for another two seconds.
The maximum speed lamp blinks, indicating that the thick paper mode has been set.

Clearing the thick paper mode

Press the "–" speed key. The maximum speed lamp stops blinking and lights up, indicating that the thick paper mode has been cleared.
This setting will also be cleared when the power is turned off.

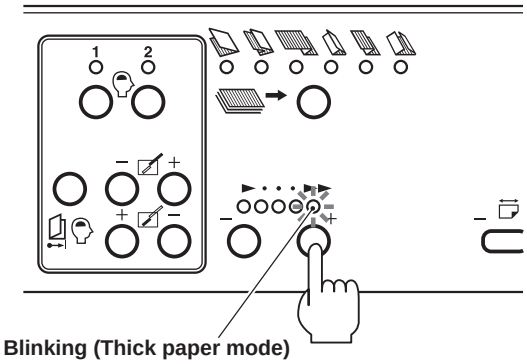

Note **This function may not be that effective, depending on the paper thickness and stiffness.**

15-2. Using Recycled Paper

Some recycled paper may be thin, flimsy and easy to curl when copied, and therefore inappropriate for folding. When folding such paper, pay attention to the following points.

- **Fan paper well prior to stacking on the paper feed tray.**
- **Set the processing speed as low as possible.**
  If set to high, wrinkles or deformed folding will result.
- **Set the paper feed pressure as low as possible.**
  If set to high, double-feed will result.
- **Set the paper separating pressure as low as possible.**
  If set to high, the center of the lead edge of the paper may be scratched or turned over.

15-3. Folding Small Size Paper

Paper size ranges within 5.1" to 7.1" in length and 3.0" to 5.0" in width (fed by short edge feeding) can be folded in the following conditions.

- Paper size ranges within 5.1" to 5.5" in length and 3.0" to 4.2" in width can only be single folded or brochure folded.
  Paper size ranges within 5.6" to 7.1" in length and 4.3" to 5.0" in width can be single folded, letter folded, accordion folded, and brochure folded, but not double folded and irregular accordion folded.

  Note **When the folding mode key is pressed, the lamps of unselectable folding modes will be skipped without lighting.**

- Paper within the above size ranges are non-standard paper. As the automatic paper size detection function does not work for these paper sizes, there is a need to register the paper length.

  See **"11. STANDARD FOLDING OF NON-STANDARD PAPER" (☞ p.35)**

- The thickness of paper which can be used ranges from 16 to 20 lb.
- Stack paper on the paper feed tray after fanning it well. However, stack less than usual, within a stacking height of 1.4".
- Do not set the maximum processing speed. Set as low as possible.

  Note **Continuous-feed occurs easily when high processing speeds are set. This is because the paper is small and light, and is not a malfunction.**

- Set the paper feed pressure to "0" or "–1".
- Set the paper separating pressure to "0", and increase the value by 0.5 at a time according to the paper feed conditions.

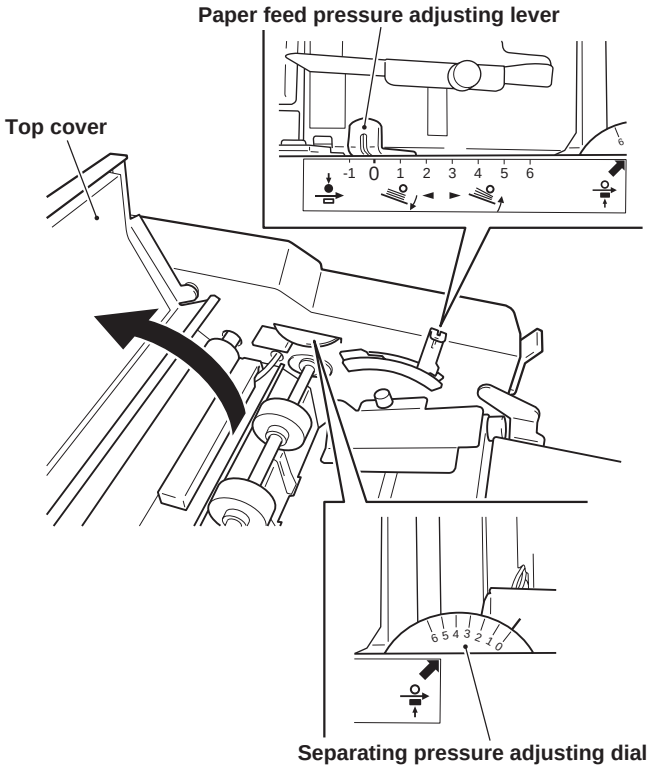

16. STACKER ROLLER

16-1. Changing the Stacker Roller Position

- If paper ejection conditions are poor, there is a need to change the position of the stacker roller. Pressing the Paper length/Stacker roller position key while pressing the stop key displays “roL. 1 to 6” on the right window, and the stacker roller moves to this displayed position.

See Step 7 in “12-2. Operation Procedure” (☞ p.39)

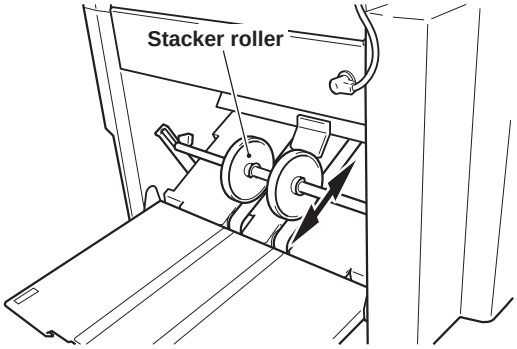

- Refer to the following table for the position for setting the stacker roller according to the folded paper length.

Approximate stacker roller set position

Right window display	Folded paper length	Applicable standard paper size and folding mode
roL.1	To 3.35"	LTR ..... Double fold LGL ..... Double fold STMT ..... Double fold, letter fold, accordion fold INV ..... Double fold, letter fold, accordion fold
roL.2	3.36" to 4.13"	LGR ..... Double fold LTR ..... Letter fold, accordion fold STMT ..... Irregular accordion fold, brochure fold INV ..... Irregular accordion fold, brochure fold
roL.3	4.14" to 4.72"	STMT ..... Single fold INV ..... Single fold
roL.4	4.73" to 5.31"	LGL ..... Letter fold, accordion fold LTR ..... Brochure fold
roL.5	5.32" to 5.91"	LGR ..... Letter fold, accordion fold, brochure fold LGL ..... Brochure fold LTR ..... Single fold, irregular accordion fold
roL.6	From 5.92"	LGR ..... Single fold, irregular accordion fold LGL ..... Single fold, irregular accordion fold

16-2. Changing the Stacker Roller Height

- Some thick and stiff paper may not be ejected smoothly because they may open up after folding. If this happens, change the height of the stacker roller and widen the space for the paper to pass in ejection.

- Lift the stacker roller and hold it with sub-support.

Note **After completing folding operations, be sure to return the stacker roller to the standard position. Leaving it in the raised state will result in poor alignment of ejected paper.**

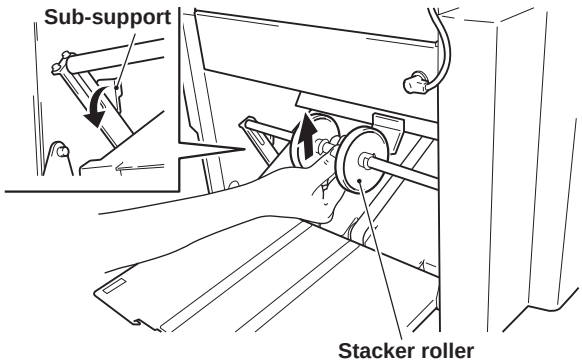

17. WHEN PAPER JAMMING OCCURS

Note **If the top cover has been opened to remove jammed paper as described below, be sure to close it after removing. This unit will not operate if the cover is open and the right window will show the error message "OPEN".**

17-1. When Paper Jams at Paper Feed Section

The right window shows "J1-1".

- Open the top cover, and pull out paper jammed near the paper feed ring. After removal, close the top cover.
- If the paper jams again, increase the paper feed pressure using the paper feed pressure adjusting lever.

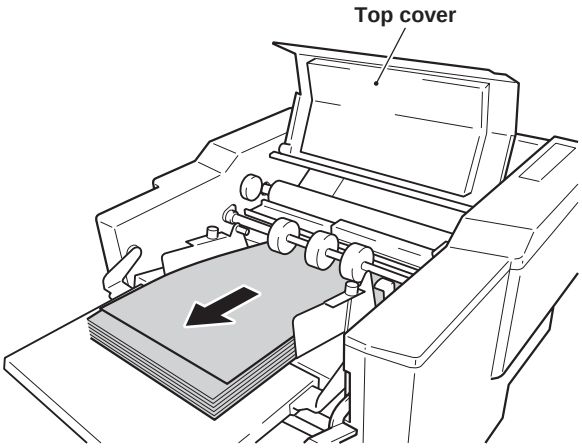

17-2. When Paper Jams Near Paper Feed Ring

The right window shows "J1-2".

- Open the top cover, and pull out paper jammed near the paper feed ring. After removal, close the top cover.
- If the paper cannot be pulled out easily, raise the paper set lever and lower the paper feed tray, and then pull out the paper.

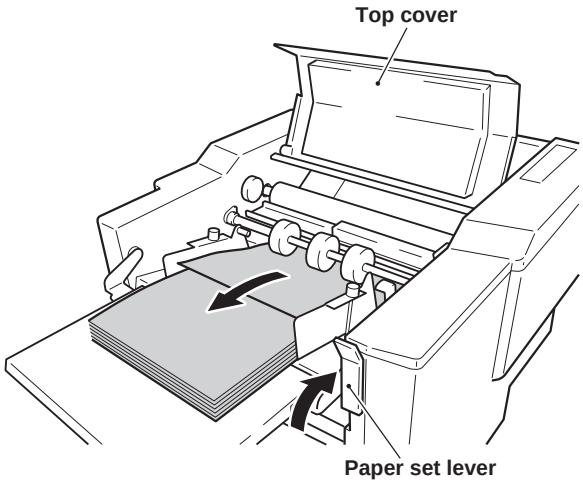

17-3. When Paper Jams Inside Folding Plate

The right window shows “J1-3”.

While pressing the stop key, press the clear key.
The folding stoppers of folding plates 1 and 2 move to the home position, pushing out the paper inside the folding plates to the paper receiving tray.

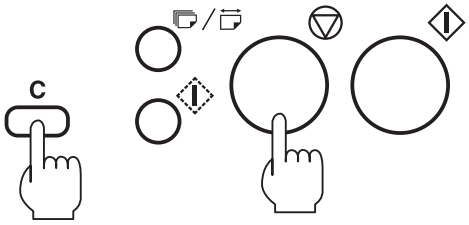

17-4. When Paper Winds Around Folding Roller

The right window shows “J1-3”.

1 **Turn off the power.**

2 **Disconnect control cord 1 of folding plate 1 from the No.1 connector.**

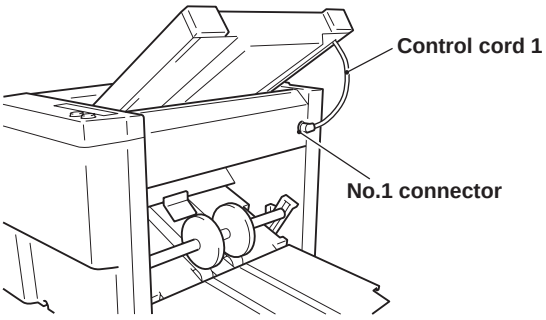

3 **Release the lock lever, and remove folding plate 1.**

Note
- **Be sure to hold folding plate 1 with both hands.**
- **Do not subject folding plate 1 to shock, otherwise it may damage, folding accuracy will drop.**

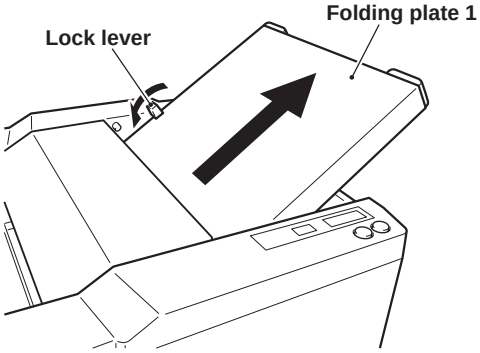

4 **Open the top cover, and while rotating the jam correction knob, remove the paper around the folding rollers.**

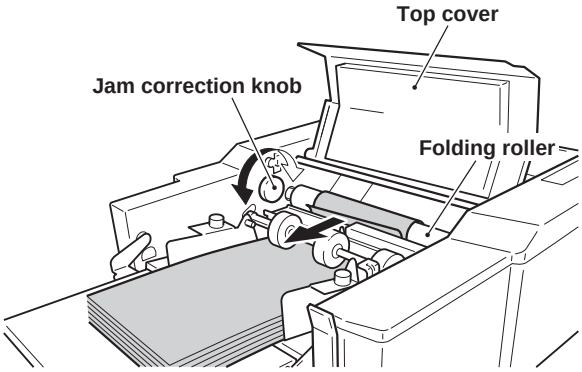

- If paper does not come out easily, insert a scale, etc. into the lead edge of the paper which had wound around the folding rollers from between the folding rollers, and remove the paper while rotating the jam correction knob.

Note **Be careful not to damage the folding rollers with the scale.**

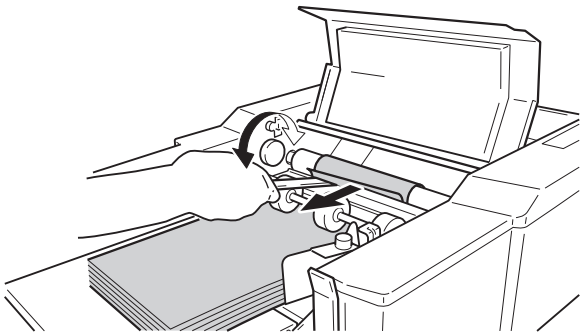

5 **After completing the above, set folding plate 1 back to the original position.**

6 **Push the lock lever towards "LOCK", and insert control cord 1 into the No.1 connector.**

7 **Rotate the jam correction knob to check that folding plate 1 is secured. If the knob rotates smoothly, it means that folding plate 1 is secured.**

- If not secured properly, the right window will show "-F1-" when the power is turned on.

8 **Close the top cover.**

17-5. When Paper Jams Near Folding Plate 1

The right window shows "J1-3".

1 **Turn off the power.**

2 **Disconnect control cord 1 of folding plate 1 from the No.1 connector.**

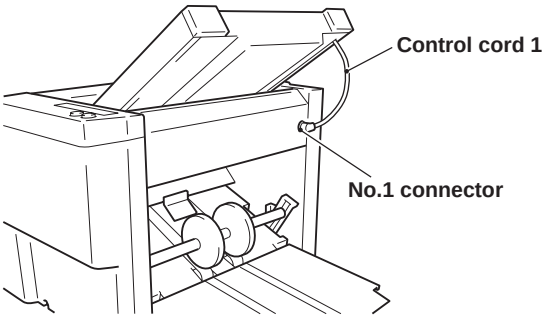

3 **Release the lock lever, and remove folding plate 1.**

Note
- **Be sure to hold folding plate 1 with both hands.**
- **Do not subject folding plate 1 to shock, otherwise it may damage, folding accuracy will drop.**

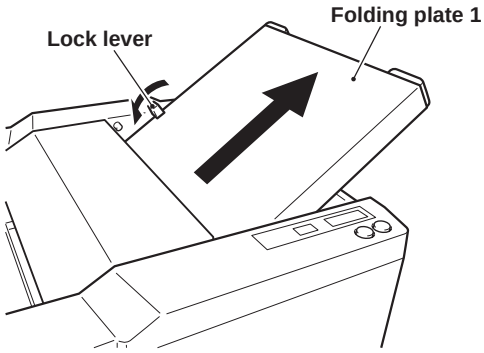

4 **Open the top cover, and while rotating the jam correction knob, pull out the jammed paper.**

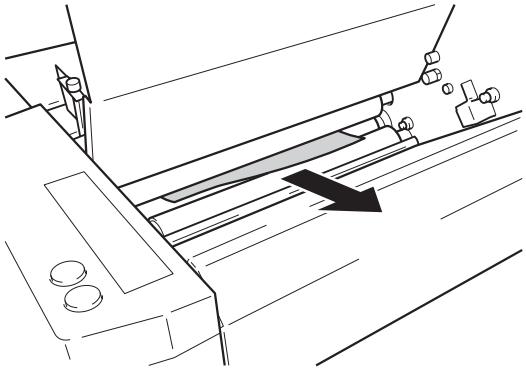

5 **After completing the above, set folding plate 1 back to the original position.**

6 **Push the lock lever towards "LOCK", and insert control cord 1 into the No.1 connector.**

7 **Rotate the jam correction knob to check that folding plate 1 is secured. If the knob rotates smoothly, it means that folding plate 1 is secured.**

- If not secured properly, the right window will show "-F1-" when the power is turned on.

8 **Close the top cover.**

17-6. When Paper Jams Near Folding Plate 2

The right window shows “J1-3”.

1 **Turn off the power.**

2 **Disconnect control cord 2 of folding plate 2 from the No.2 connector, and release the lock lever.**

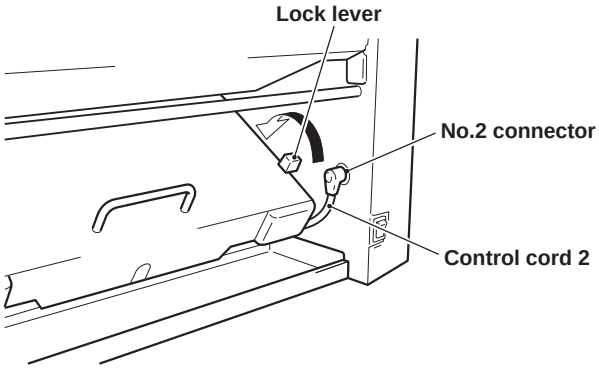

3 **Remove folding plate 2.**

① While slightly lifting the handle, slide folding plate 2 downwards to the “2 ( )” mark.

② While slightly lifting the handle, further slide folding plate 2 downwards and remove.

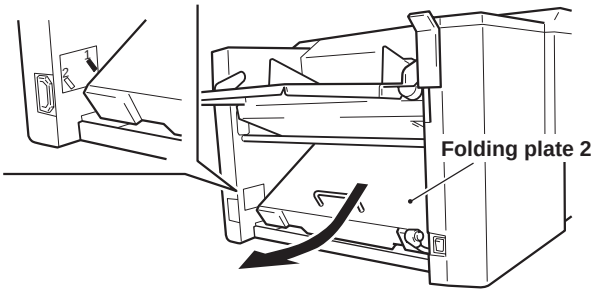

Note
- **To ensure safety, be sure to follow the above procedure. Performing this work incorrectly may result in folding plate 2 dropping, injuries, or damage of folding plate 2.**
- **Be sure to hold folding plate 2 holding the handle with both hands.**
- **Do not subject folding plate 2 to shock, otherwise it may damage, folding accuracy will drop.**

4 **Open the top cover, and while rotating the jam correction knob, pull out the jammed paper.**

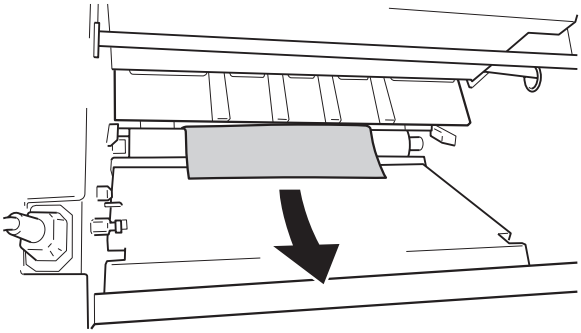

5 **After completing the above, set folding plate 2 back to the original position.**

- Set folding plate 2 in the reverse order of step **3**. Secure at the “1 ( )” mark.

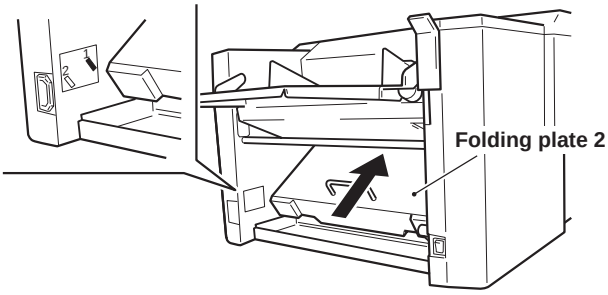

6 **Push the lock lever towards “LOCK”, and insert control cord 2 into the No.2 connector.**

7 **Rotate the jam correction knob to check that folding plate 2 is secured. If the knob rotates smoothly, it means that folding plate 2 is secured.**

- If not secured properly, the right window will show “-F2-” when the power is turned on.

8 **Close the top cover.**

17-7. When Paper Jams at Paper Ejection Section

The right window shows “-J2-”.

1 **Check where the paper has jammed at the paper ejection section.**

2 **If the paper has come to the front of the stacker roller, pull out the paper.**

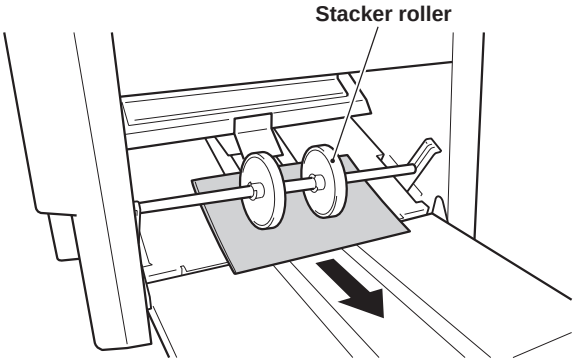

3 **If the paper has jammed deep inside the stacker roller, run the folding roller and stacker belt to eject the jammed paper.**

- While pressing the stop key, press the test key. The folding roller and stacker belt start running.

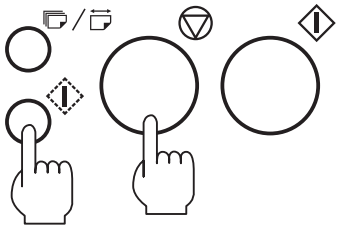

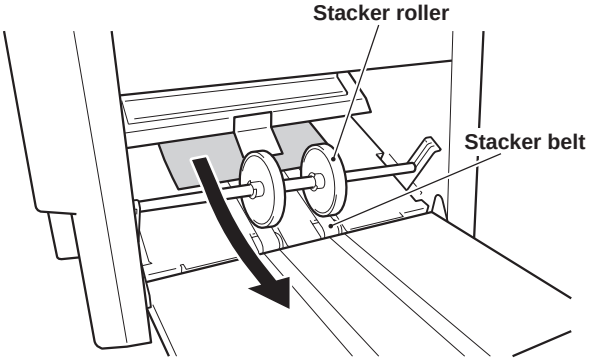

4 **Press the test key to perform test folding, and check the paper ejection state.**

- If the paper is not ejected smoothly, adjust the position or height of the stacker roller.

See “16. STACKER ROLLER” (☞ p.47)

18. ERROR MESSAGES

When paper jamming, errors, malfunctions occur, details are displayed on the left or right window. The following describes the error messages and solutions.
If the unit still does not operate normally even after implementing the following solutions, contact your nearest dealer.

Note **Be sure to disconnect the power cord from the outlet before implementing a solution.**

(1) Error message displayed on the left window

Display	Details of display	Solution
PE	No paper on the paper feed tray	Stack paper on the paper feed tray.

(2) Error messages displayed on the right window

Display	Details of display	Solution
OPEN	The top cover is open.	Close the cover.
-F1-	Folding plate 1 is not set correctly.	Set back correctly.
-F2-	Folding plate 2 is not set correctly.	Set back correctly.
J1-1	Paper is not fed normally due to mis-feeding (slips), etc.	Adjust the paper feed pressure and paper separating pressure.
J1-2	Paper jamming at paper feed section	Remove the jammed paper.
J1-3	Paper jamming inside this unit	Remove the jammed paper.
-J2-	Paper jamming at paper ejection section	Remove the jammed paper.
-J3-	The stacking direction of the paper on the paper feed tray is incorrect (example: stacking LTR in long edge feeding direction detects LGR).	Stack paper in the correct direction.
Err2	The paper feed tray is not set at the paper feed position.	Lower the paper set lever to set the paper feed tray at the paper feed position.
Err1↔P.OFF (Alternately displayed)	Malfunction of main motor. Abnormal load on the motor due to paper jamming, etc.	Remove the jammed paper.
Err3↔P.OFF (Alternately displayed)	Malfunction of stacker roller motor. Abnormal load on the motor due to paper jamming, etc.	Remove the jammed paper.
Err4↔P.OFF (Alternately displayed)	Malfunction of folding plate 1 motor. Control cord 1 of folding plate 1 is not connected properly.	Check the connection of control cord 1.
Err5↔P.OFF (Alternately displayed)	Malfunction of folding plate 2 motor. Control cord 2 of folding plate 2 is not connected properly.	Check the connection of control cord 2.

19. TROUBLESHOOTING

Before calling your dealer, check the following.

Problem	Check	Correct
The unit does not start even when the start key is pressed.	● Is there paper stacked on the paper feed tray? ● Is paper placed properly over the paper switch of the paper feed tray? ● Has paper jammed? ● Is the top cover open? ● Is non-standard paper used in standard paper settings? ● Is the paper size displayed on the left window? ● Is there a gap between the paper feed guide and paper? ● Is the control cord of folding plate 1 or 2 disconnected?	● Stack paper. ● Place paper over the paper switch so that it is properly pressed. ● Remove jammed paper. ● Close the top cover. ● Change to non-standard paper operations. See **"11. STANDARD FOLDING OF NON-STANDARD PAPER" (☞ p.35)** ● Adjust the paper feed guides accurately to the paper size on the paper feed tray scale. ● Adjust the paper feed guides to the paper firmly, ensuring no gaps. ● Turn off the power, and insert that control cord into the connector.
The main motor does not rotate.	● Is the power cord inserted into the outlet? ● Is the top cover open? ● Has paper jammed?	● Insert the power cord into the outlet. ● Close the top cover. ● Remove jammed paper.
	Note **If the motor is subject to abnormal load due to paper jamming, etc., power to the motor will be cut off. Investigate the cause of the paper jam carefully. After correcting the cause, turn on the power again and resume operations.**	
The folding stopper of folding plate 1 or 2 does not operate.	● Is the control cord of folding plate 1 or 2 disconnected?	● Turn off the power, and insert that control cord into the connector.
Paper is not folded at the normal folding position.	● Are folding plates 1, 2 set properly? ● Has static electricity occurred in the paper?	● Set folding plates 1, 2 again. ● Lower the processing speed. ● Fan the paper well. ● Humidify with a humidifier as required.
Paper jam occurs.	● Has the paper been fanned well? ● Is the paper curled? ● Is the paper conveyance route jammed with paper chips, etc.? ● Is the folding roller dirty? ● Is the position of the stacker roller of the paper ejection section incorrect? ● Has static electricity occurred in the paper?	● Fan the paper well. ● Correct the paper curl before use. ● Inspect the inside of the unit, and remove paper chips. ● Clean with a cloth moistened with alcohol. ● Set the stacker roller position correctly again. ● Use a commercially available static electricity removal spray. ● Humidify with a humidifier as required.
Paper is double-fed.	● Is the paper feed pressure value set too high? ● Is the paper separating pressure value set too low? ● Is the paper separator dirty? ● Is the paper sticking to each other and difficult to separate? ● Is paper outside the specifications used?	● Decrease the paper feed pressure. ● Increase the paper separating pressure. ● Clean with a cloth moistened with alcohol. ● Check that the printing ink of the paper has dried and there is no static electricity, and then fan the paper well. ● Do not use paper outside the specifications.

Problem	Check	Correct
Paper slips at the paper feed section.	● Is the paper feed pressure value set too low? ● Is the paper separating pressure value set too high? ● Is the paper feed ring dirty? ● Is the paper sticking to each other and difficult to separate? ● Is paper outside the specifications used?	● Increase the paper feed pressure. ● Decrease the paper separating pressure. ● Clean with a cloth moistened with alcohol. ● Check that the printing ink of the paper has dried and there is no static electricity, and then fan the paper well. ● Do not use paper outside the specifications.
Folding misalignment along the vertical length of the paper occurs.	● Was the processing speed changed from halfway? ● Was the paper type (paper quality, thickness) changed from halfway?	● Return to the speed before change. ● When changing the speed, the folding stopper positions of folding plates 1 and 2 must be adjusted. ● Use paper before change. ● When changing paper, the folding stopper positions of folding plates 1 and 2 must be adjusted.
Folding misalignment along the sides of the paper occurs.	● Is more paper than the standard amount stacked on the paper feed tray? ● Are the paper feed guides set properly? ● Are the fixing screws of the paper feed guides loose? ● Is paper cut properly?	● Reduce the paper amount. ● Set the paper feed guides correctly again. ● Tighten the fixing screws properly. ● Correct the folding misalignment along the sides of the paper using the skew correction knob.
Continuous-feeding occurs with small paper.	● Is small paper outside the specifications used? ● Is the paper feed pressure value set too high? ● Is there a gap between the paper feed guide and paper? ● Is paper aligned? ● Is thin, flimsy paper used?	● Do not use paper outside the specifications. ● Decrease the paper feed pressure. ● Adjust the paper feed guides to the paper firmly, ensuring no gaps. ● Align the paper well before stacking on the paper feed tray. ● Lower the processing speed.
Single-folded thick paper jams at the folding rollers.	● Is paper outside the specifications used? ● Is the paper feed pressure value set too high? ● Has the paper been fanned well?	● Do not use paper outside the specifications. ● Decrease the paper feed pressure. ● Fan the paper well.

20. CLEANING THE UNIT

The adherence of paper dust, printing ink, etc. on the folding rollers, paper feed rings causes problems such as paper feed errors, folding misalignment, etc. Clean as follows.

Note
- **Prior to cleaning, be sure to disconnect the power cord from the outlet.**
- **After cleaning, make sure that the areas that were cleaned are completely dry before resuming paper folding operations.**
- **After cleaning, be sure to close the top cover properly. If not closed properly, the unit will not operate.**

⚠ WARNING

Do not use flammable sprays or solvent inside or near the unit (e.g. when cleaning the unit). Such flammable gas may ignite and cause a fire or combustion. Take precautions against fire and ensure ventilation when using alcohol, and store the alcohol in a safe place after use. Also note that use of other solvents can damage the rubber rollers and resin inside the unit, resulting in malfunctions.

20-1. Cleaning the Folding Rollers

Remove folding plate 1 to clean the folding rollers.

1 Disconnect control cord 1 of folding plate 1 from the No.1 connector.

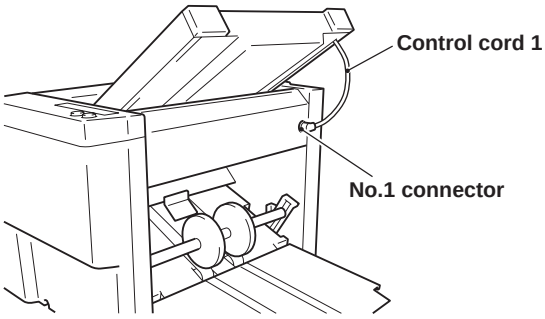

2 Release the lock lever, and remove folding plate 1.

Note
- **Be sure to hold folding plate 1 with both hands.**
- **Do not subject folding plate 1 to shock, otherwise it may damage, folding accuracy will drop.**

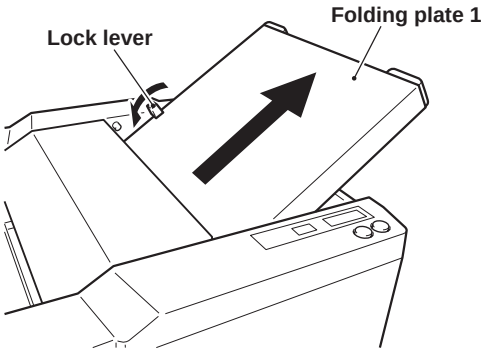

3 Open the top cover.

4 While rotating the folding rollers with the jam correction knob, clean them with a cloth moistened with alcohol.

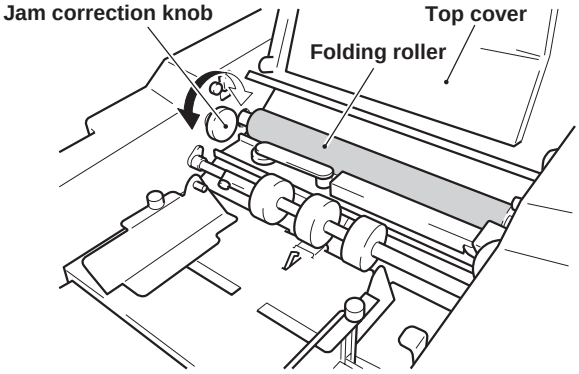

5 Set folding plate 1 back to the original position.

6 Push the lock lever towards "LOCK", and insert control cord 1 into the No.1 connector.

7 Rotate the jam correction knob to check that folding plate 1 is secured. If the knob rotates smoothly, it means that folding plate 1 is secured.

- If not secured properly, the right window will show "-F1-" when the power is turned on.

8 Close the top cover.

20-2. Cleaning the Paper Feed Rings

1 **Open the top cover.**

2 **While rotating the paper feed rings by hand, clean them with a cloth moistened with alcohol.**

> **Note** **Immediately after cleaning, the dirt on the paper feed ring may stick to the paper. Therefore perform test folding until all dirt has been removed.**

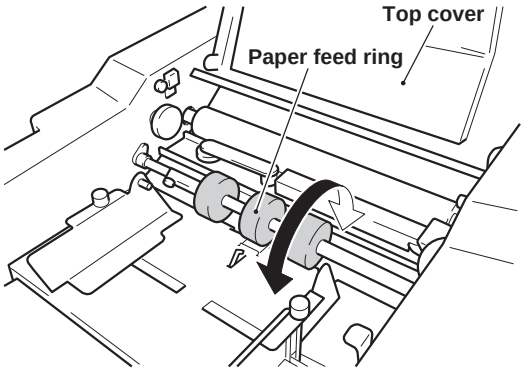

3 **Close the top cover.**

20-3. Cleaning the Paper Separator

1 **Open the top cover.**

2 **Loosen the fixing screw of the middle paper feed ring, and move it aside.**

3 **Clean the paper separator with a cloth moistened with alcohol.**

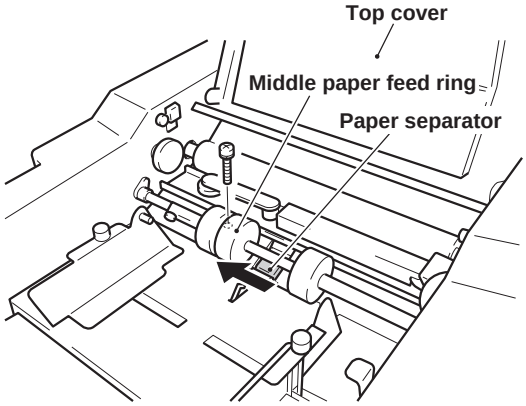

4 **Move the paper feed ring to its original position, and tighten the screw.**

5 **Close the top cover.**

20-4. Cleaning the Paper Feed Inlet Sensor

The paper feed inlet of this unit has a sensor for checking the paper feed state. This sensor may fail with the error message “J1-2” when printing powder and paper dust accumulate on it.

When this message appears, clean the sensor with an Air Duster (a commercially available air spray for eliminating dust for office equipment).

1 **Open the top cover.**

2 **Insert the nozzle of the Air Duster into the hole of the sensor cover and paper feed inlet, and spray briefly.**

> **Note**
> - **Use a non-flammable type. Read the instructions on use carefully, and be sure to observe them.**
> - **The Air Duster gas will cool the sensor and metallic parts, causing temporary condensation. After cleaning, leave for about five minutes before use.**

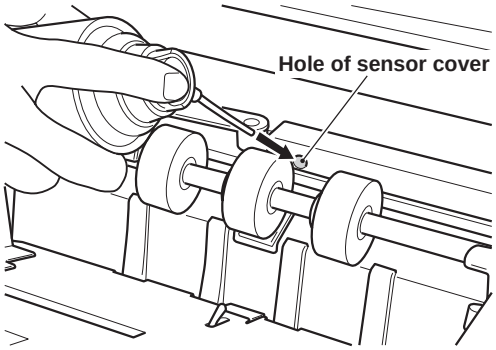

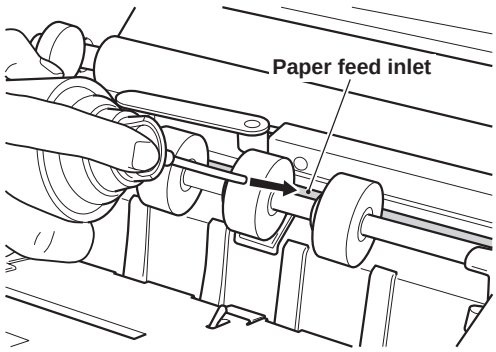

3 **Close the top cover.**

20-5. Cleaning the Paper Ejection Outlet Sensor

The paper ejection outlet of this unit has a sensor for checking the paper ejection state. This sensor may fail with the error message "-J2-" when printing powder and paper dust accumulate on it.

When this message appears, clean the sensor with an Air Duster (a commercially available air spray for eliminating dust for office equipment) as well as a paintbrush, etc.
This sensor consists of two sensors located at the top and bottom of the paper ejection outlet. First clean the upper sensor and then the lower sensor.

◆ *Cleaning the upper sensor*

1 **Disconnect control cord 1 of folding plate 1 from the No.1 connector, release the lock lever, and then remove folding plate 1.**

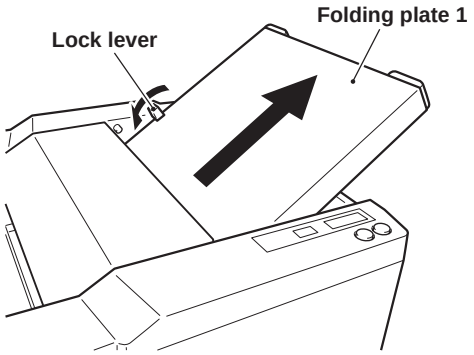

2 **Insert the nozzle of the Air Duster into the hole of the top cover R shown in the figure, and spray briefly.**

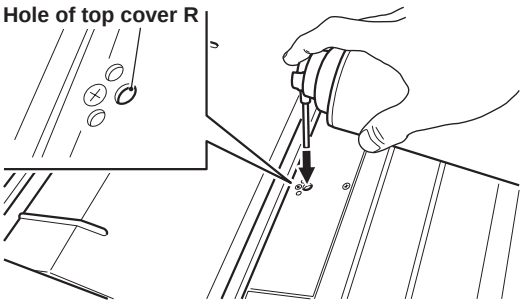

3 **Set folding plate 1 back to the original position.**

4 **Push the lock lever towards "LOCK", and insert control cord 1 into the No.1 connector.**

◆ *Cleaning the lower sensor*

1 **Disconnect control cord 2 of folding plate 2 from the No.2 connector, release the lock lever, and then remove folding plate 2.**

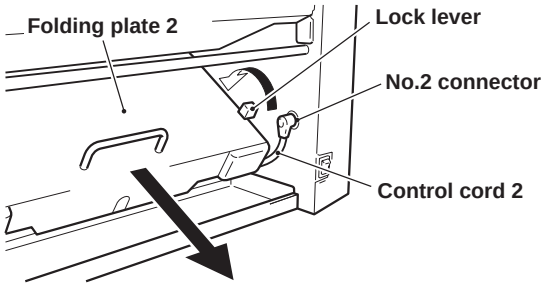

2 **Insert the paintbrush straight in from the hole of the power supply cover along the guide, and gently clean the top of the sensor with the brush.**

Note **Do not rub the top of the sensor with the metal portion of the paintbrush, as this may damage the film protecting the sensor, causing sensor problems.**

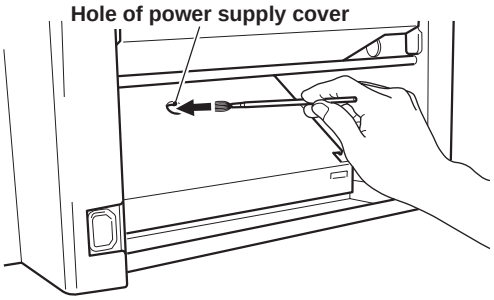

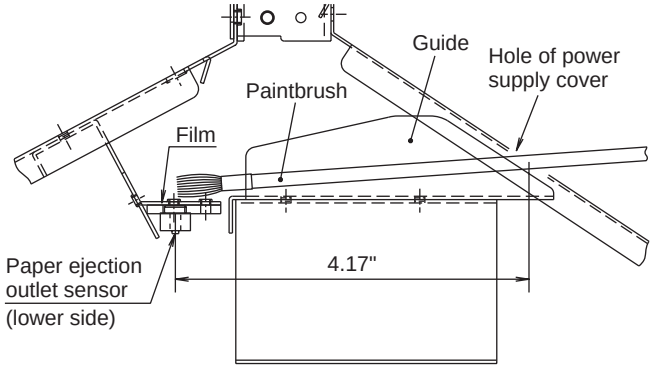

3 **Set folding plate 2 back to the original position.**

4 **Push the lock lever towards "LOCK", and insert control cord 2 into the No.2 connector.**

21. SPECIFICATIONS

Model		DF-915
Paper size	Max.	11.7" (W) × 17.0" (L) (Along paper feed direction)
	Min.	5.1" (W) × 7.2" (L) (Along paper feed direction) However paper size ranges within 5.1" to 7.1" in length and 3.0" to 5.0" in width can be folded under certain conditions.
Paper quality		Fine quality paper, recycled paper, drawing paper, specific art paper, specific coated paper
Folding mode		Single fold, double fold, irregular accordion fold, letter fold, accordion fold, brochure fold, specific cross fold (14 to 28 lb paper), other non-standard fold
Paper weight		14 to 40 lb ∗ However LGR paper can be up to 40 lb thick for single folding only. For other folding modes, thickness can be up to 32 lb. 40 lb thick paper below INV size cannot be double folded or irregular accordion folded.
Paper feed tray capacity		500 sheets (fine quality paper 16 lb)
Maximum processing speed		250 sheets/minute Condition: When 16 lb LTR size fine quality paper is single folded
Paper feed method		3-ring friction feed with skew correction function
Paper feed tray control function		Paper presence detection
Paper size detection function		Automatic detection of following standard paper sizes: LGR, LGL, LTR, STMT, and INV (fed by short edge feeding)
Paper feed error detection function		Mis-feed, continuous-feed, paper jam
Counter		Add counter/subtract counter selectable
Other detection functions		Opening/closing of top cover With/without folding plates 1, 2
Additional functions		Folding stopper position adjustment registration (30 ways), custom folding registration (2 ways)
Power supply		100 to 240 V AC 50/60 Hz
Current consumption		1.4 to 0.7 A (95 W)
Dimensions	In use	42.76" (W) × 20.63" (D) × 19.57" (H)
	In storage	25.79" (W) × 20.63" (D) × 19.57" (H)
Mass (Weight)		94 lb

Specifications and dimensions are subject to change without prior notice for improvements.

QUICK START

Operation Procedure

1 Prepare the unit.

① Open the auxiliary paper feed tray.

② Open the paper receiving tray.

③ Extend the paper receiving stopper.

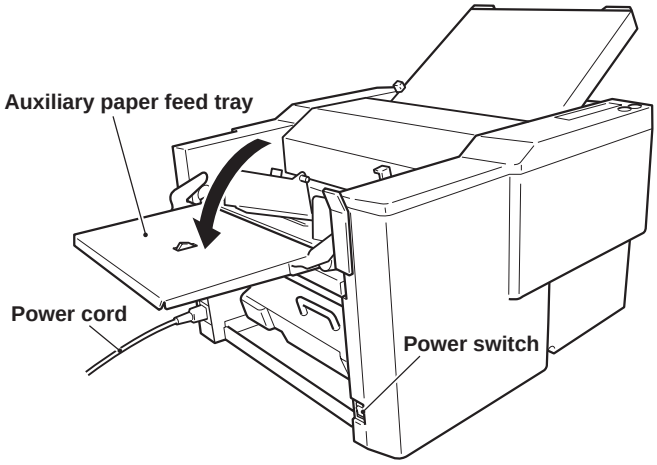

2 Turn on the power switch.

● Insert the plug of the power cord into the outlet, and turn on the power switch.

3 Stack paper.

① Stack paper on the paper feed tray.

② Move the paper feed guides according to the paper width, and tighten the fixing screws.

③ Lower the paper set lever and set the paper feed tray.

❑ **Adjust the paper feed guides to the corresponding paper size on the paper feed tray scale. If not adjusted to the appropriate scale, the paper size will not be detected accurately and this unit will not operate.**

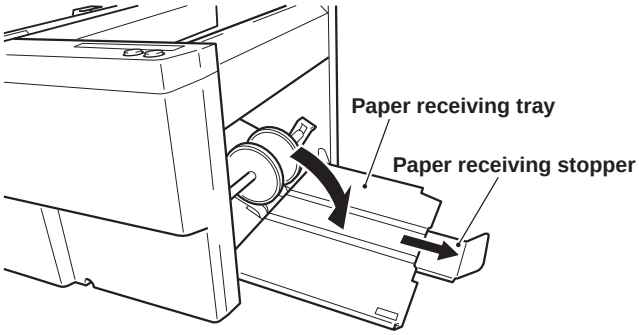

4 Perform test folding.

① Select the folding mode with the folding mode key.

② Press the test key to perform test folding, and check the finish.

5 Start paper folding operations.

● Press the start key. Paper folding continues until the paper feed tray becomes empty.
If the number of sheets to be processed was entered using the Paper length/Stacker roller position key prior to starting, the unit stops upon completing folding of this number of sheets.

❑ **To stop halfway, press the stop key.**

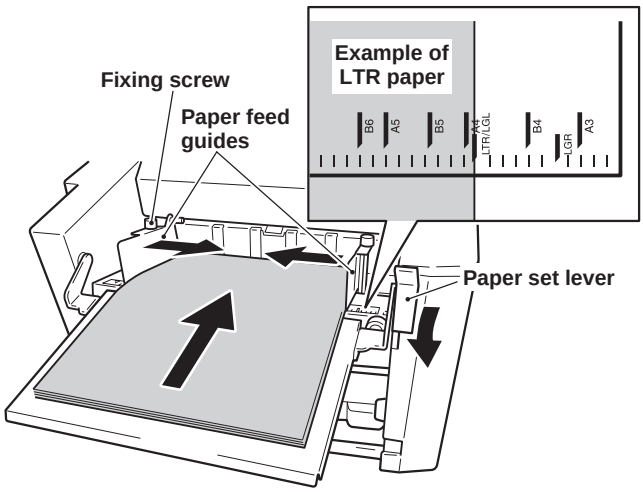

6 End paper folding operations.

① Turn off the power switch.

② Store the auxiliary paper feed tray, paper receiving stopper, and paper receiving tray.

❑ **If not using the unit for a long time, disconnect the power cord from the outlet.**

Note **This QUICK START is intended for outlining the main steps of the paper folding procedure to those who have read the instruction manual once. Those who have not read the instruction manual should perform paper folding operations while referring to the instruction manual.**

Control Panel

Standard folding lamp
The lamp of the selected folding mode lights up.

Folding mode key
Key for selecting the standard folding mode

Left window
Displays the standard paper size, etc.

Right window (Counter)
Displays the number of sheets processed and error messages.

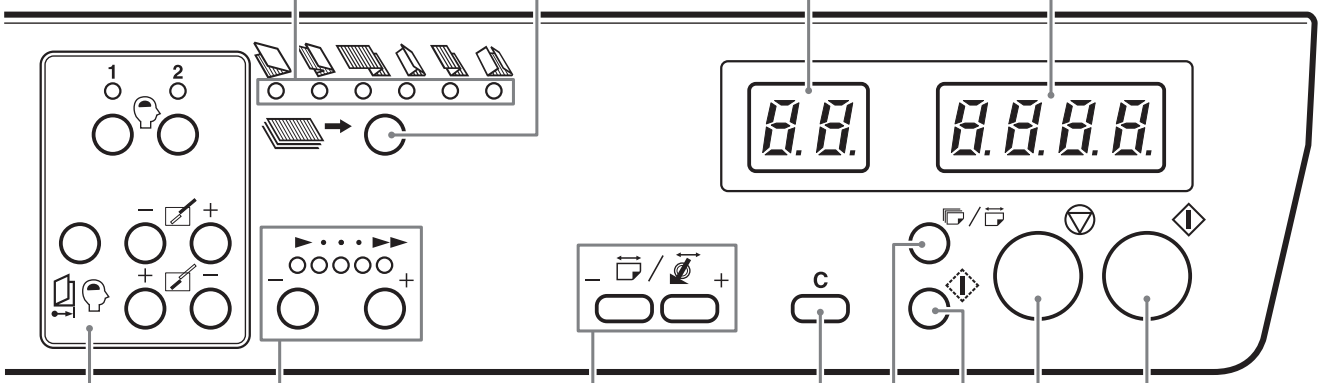

Refer to the **instruction manual** for custom folding registration and correction of standard folding. **(☞ p.29, 38)**

Refer to the **instruction manual** for settings of subtract counter, paper length, and stacker roller position. **(☞ p.27, 36, 47)**

Clear key
Key for erasing the count displayed by the counter

Start key

Stop key

Speed key
Keys for changing the processing speed. Pressing the "+" key on the right increases the processing speed, and pressing the "–" key on the left decreases.

Refer to the **instruction manual** for paper length registration. **(☞ p.35)**

Test key
Key for test folding

Front/Back, Top/End of Paper in Stacking and Ejection

The front, back, top, and end of the paper folded by a folding mode differ according to how the paper is placed on the paper feed tray.

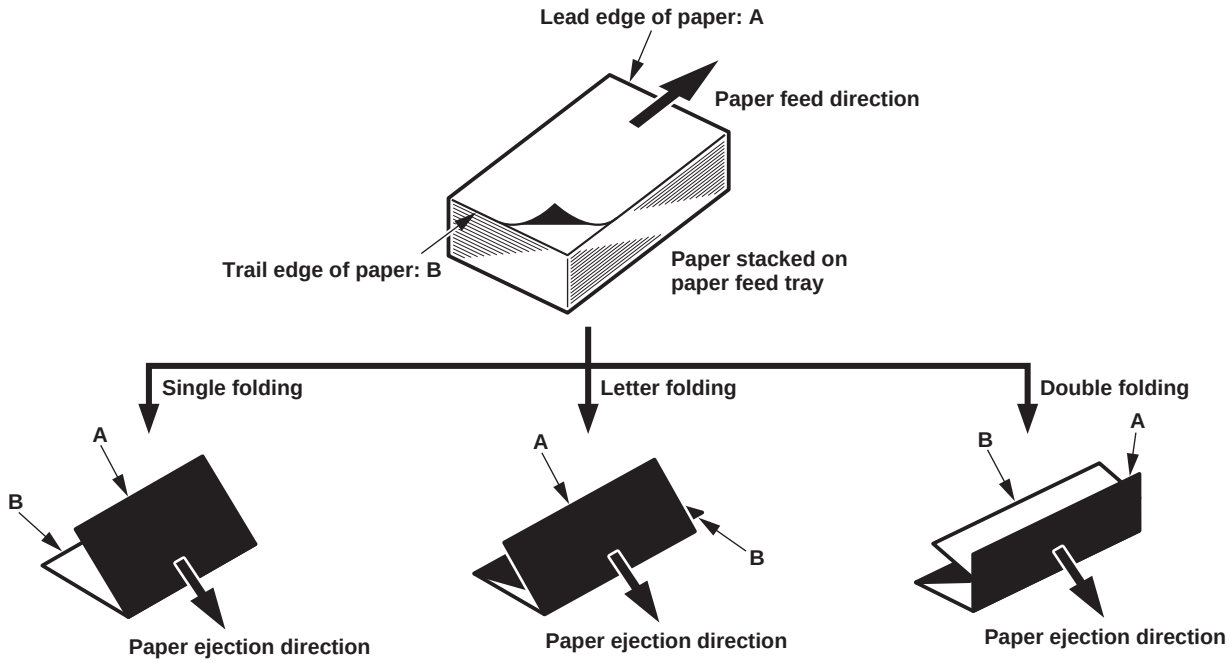

DUPLO CORPORATION

Duplo building, 1-6, Oyama 4 chome, Sagamihara, Kanagawa 229-1180, Japan

TEL : +81-42-775-3602

FAX : +81-42-775-3606

E-mail : info@duplo.com

This manual is printed on recycled paper to help protect the environment.

12H-90494-05050200M-0